THIS DRAWING IS UNPUBLISHED. RELEASED FOR PUBLICATION -,- .
© COPYRIGHT - By - ALL RIGHTS RESERVED.

LOC	DIST
—	—

REVISIONS

P	LTR	DESCRIPTION	DATE	DWN	APVD
	P	REVISED PER ECR-12-013459	28NOV2012	KH	PD

1. CONTINUOUS STRIP ON REELS
2. WIRE SIZE IS #18-#16 OR TWO #18'S.
3. INSULATION RANGE IS .105-.210 OR TWO AT .105 MAX.
4. MATING TAB THK IS .032±.001.

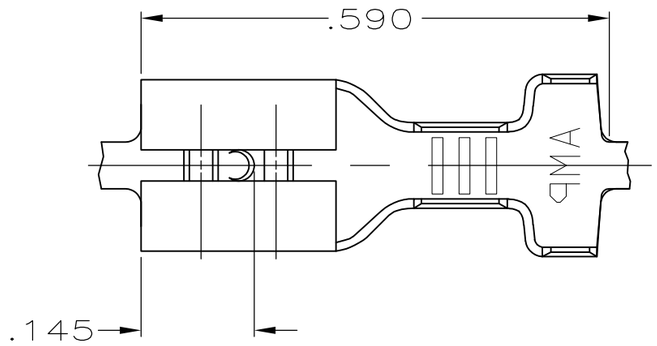

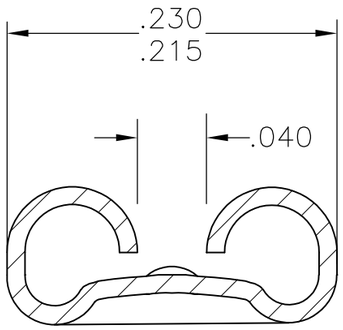

SECTION A-A
SCALE 8:1

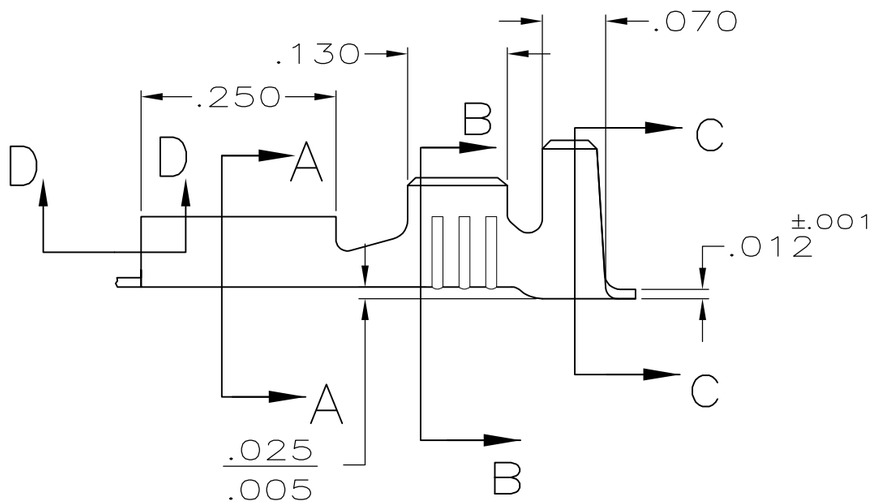

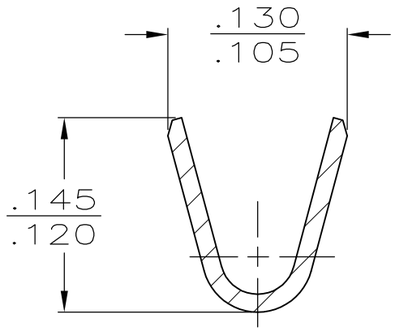

SECTION B-B
SCALE 8:1

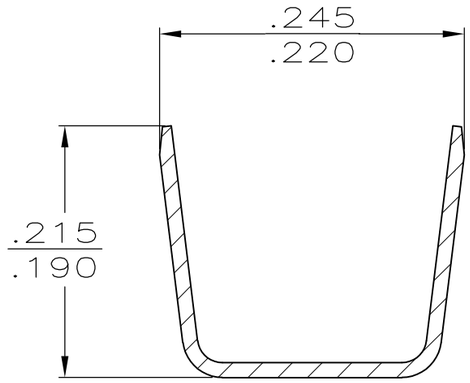

SECTION C-C
SCALE 8:1

SWAGE ON 61945-1 ONLY

SECTION D-D

FINISH	MATERIAL	PART NO.
.000150 MIN NICKEL	T2 STEEL	61945-2
TIN	BRASS	61945-1

TYPE	WIDTH	STRIP LENGTH ±.015	TYPE	WIDTH	#.002 HEIGHT	WIRE
F	.210	.188	F	.100	—	—
					.055	16
					.049	18
INSUL BARREL CRIMP		WIRE BARREL CRIMP				

THIS DRAWING IS A CONTROLLED DOCUMENT.

DIMENSIONS: INCHES

TOLERANCES UNLESS OTHERWISE SPECIFIED:
0 PLC ± -
1 PLC ± -
2 PLC ± -
3 PLC ± .015
4 PLC ± -
ANGLES ± -

MATERIAL: SEE TABLE
FINISH: SEE TABLE

DWN JR RUTH 8/21/91
CHK MS FEHER 8/21/91
APVD C MEYERS 8/21/91
PRODUCT SPEC —
APPLICATION SPEC —
WEIGHT —

TE Connectivity

NAME: RECEPTACLE, FASTON, .187 SERIES

SIZE	CAGE CODE	DRAWING NO	RESTRICTED TO
A3	00779	C-61945	—

CUSTOMER DRAWING | SCALE 5:1 | SHEET 1 OF 1 | REV P

1470-19 (3/11)