THIS DRAWING IS UNPUBLISHED. RELEASED FOR PUBLICATION –,– .
© COPYRIGHT – By – ALL RIGHTS RESERVED.

LOC	DIST
G	14

REVISIONS

P	LTR	DESCRIPTION	DATE	DWN	APVD
	M2	REVISED PER ECO-11-004587	11MAR11	RK	HMR

AMP WIRE RANGE	Listed	LR7189 Certified
16–14 AWG SOLID OR STRANDED	16–14 AWG SOLID OR STRANDED	16–14 AWG SOLID OR STRANDED

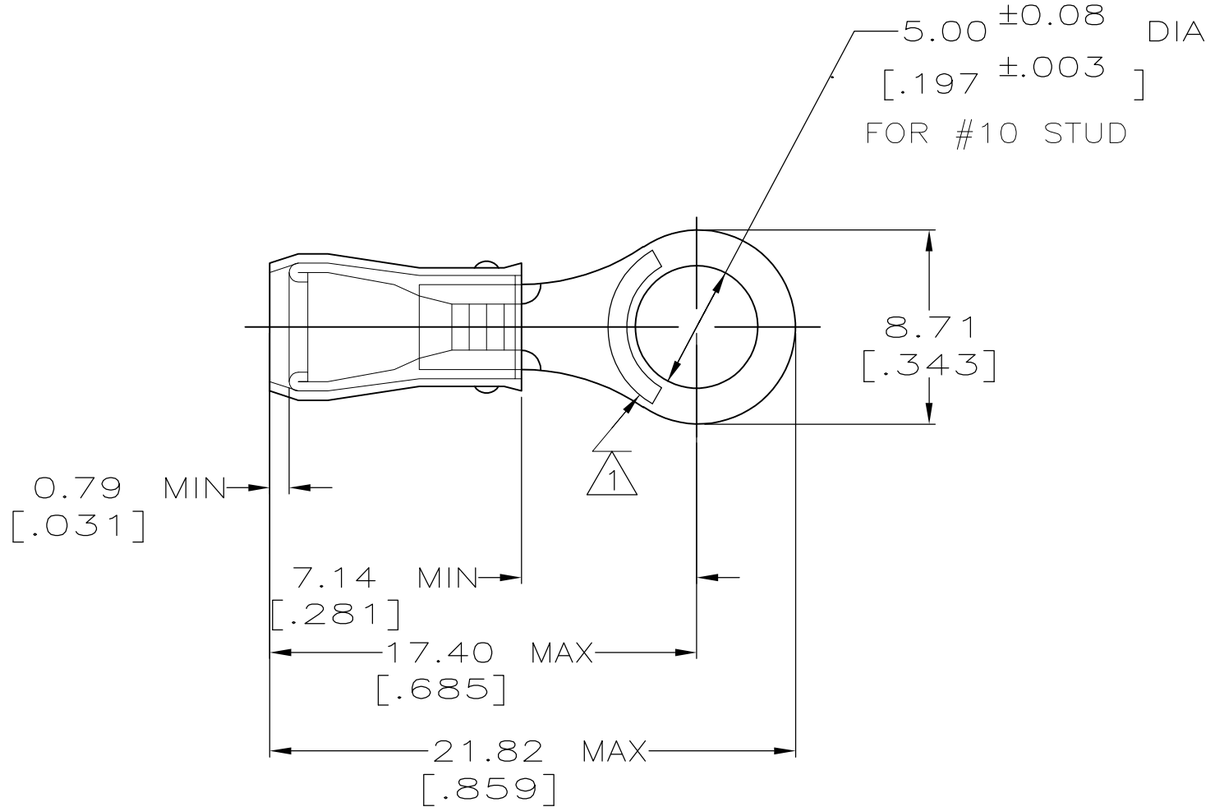

1 STAMP AMP 16–14* APPROX AS SHOWN
STAMP MAY BE ON TOP OR BOTTOM.

2 WIRE INSUL DIA, 2.92–4.32 [.115–.170]

3 TONGUE MATERIAL THK, 0.79±0.05 [.031±.002]

4 SUPERSEEDED BY 8–36160–5

	QUANTITY	PACKAGE TYPE	PART NO
4	~~25~~	~~LOOSE PIECE,BLS~~	~~9–36160–4~~
	50	LOOSE PIECE,BAG	8–36160–5
4	~~5~~	~~LOOSE PIECE,BLS~~	~~8–36160–4~~
	100	LOOSE PIECE, BOX	8–36160–1
	5000	ON TAPE, REEL	2–36160–1
	1000	LOOSE PIECE	36160

AMP INCORPORATED
CUSTOMER SERVICE SYSTEMS

FOR ADDITIONAL PRODUCT INFORMATION OR COPIES OF DRAWINGS AND TECHNICAL DOCUMENTS	PRODUCT INFORMATION CENTER 1–800–522–6752
FOR APPLICATION TOOLING INFORMATION	TOOLING ASSISTANCE CENTER 1–800–722–1111
FOR ORDER ENTRY	1–800–526–5142

MAX RECOMMENDED OPERATING TEMPERATURE: 105° C [221° F]

VOLTAGE RATING: 300 V MAX

WIRE CROSS SECTIONAL AREA RANGE: 1.04–2.62mm²

THIS DRAWING IS A CONTROLLED DOCUMENT FOR AMP INCORPORATED. IT IS SUBJECT TO CHANGE AND THE CONTROLLING ENGINEERING ORGANIZATION SHOULD BE CONTACTED FOR THE LATEST REVISION.

DIMENSIONS: INCHES

TOLERANCES UNLESS OTHERWISE SPECIFIED:
0 PLC ± –
1 PLC ± –
2 PLC ± 0.20[.008]
3 PLC ± –
4 PLC ± –
ANGLES ± –

MATERIAL: COPPER ASTM B–152 SLEEVE BLUE NYLON

FINISH: TIN PLATE ASTM B545

DWN	JR RUTH	17DEC99
CHK	RE HERSEY	17DEC99
APVD	T MICHIELUTTI	17DEC99
PRODUCT SPEC	UL 486A	
APPLICATION SPEC	114–2157	
WEIGHT	–	

TE Connectivity

NAME: TERMINAL, RING TONGUE, PIDG™, WIRE SIZE: 16–14 AWG

SIZE	CAGE CODE	DRAWING NO	RESTRICTED TO
A3	00779	C–36160	–

CUSTOMER DRAWING | SCALE 4:1 | SHEET 1 OF 1 | REV M2

1470–19 (3/11)