Date	SYM	REVISION RECORD	AUTH	DR.	CK.
11/07/14	A	UPDATED TO ROHS 2 COMPLIANT	T.B.	B.S.	

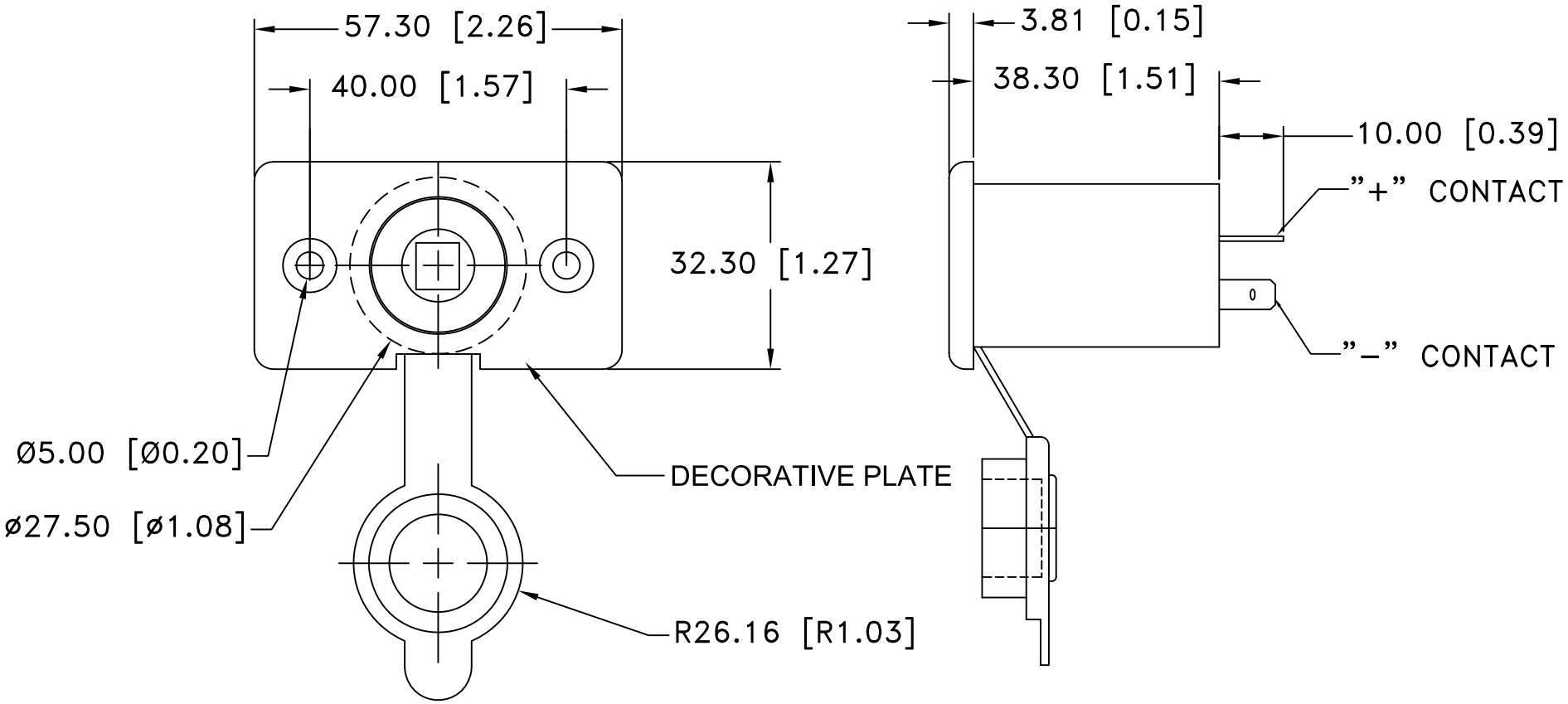

MATERIAL SPECIFICATION:
- COVER: PVC
- BODY: NYLON #66
- CONTACTS: BRASS, NICKEL PLATED
- PLATE: NYLON #66

ROHS 2 COMPLIANT

Tolerance (Except as noted)	MPD Memory Protection Devices, Inc 200 Broad Hollow Road, Farmingdale, New York 11735		
decimal ±.5 (.020)		Scale	Drawn By B.S. Approved By T.B.
Fractional ± .8 (.030)	Title 12V CIGARETTE SOCKET, 15AMP		
Angular ± 3°	Date 11/07/14	Drawing Number AS215	