THIS DRAWING IS UNPUBLISHED. RELEASED FOR PUBLICATION -.- .
© COPYRIGHT - BY TYCO ELECTRONICS CORPORATION. ALL RIGHTS RESERVED.

LOC	DIST
AD	25

REVISIONS

P	LTR	DESCRIPTION	DATE	DWN	APVD
	M	REVISED PER EC 0S12-0239-05	28OCT05	JDP	AMS

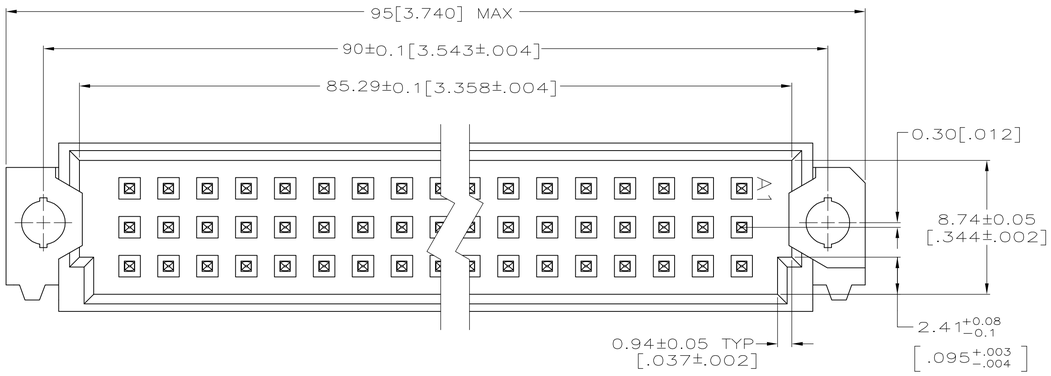

1. HOUSING MATERIAL: GLASS-FILLED POLYESTER. COLOR: GRAY.
2. POST MATERIAL: PHOSPHOR BRONZE.
3. POST FINISH: DIN 41612 CLASS 3 IN CONTACT AREA. TIN-LEAD PLATE ON POSTS.
4. POST FINISH: DIN 41612 CLASS 2 IN CONTACT AREA. TIN-LEAD PLATE ON POSTS.
5. ACTION PIN POSTS REQUIRE 2.36[.093] MINIMUM THICK PC BOARD. RECOMMENDED PC BOARD HOLES ARE 1.151[.0453] DIA PLATED THROUGH WITH 0.02-0.08[.001-.003] COPPER AND 0.008[.0003] MINIMUM TIN-LEAD PLATING. FINISHED HOLE AFTER PLATING, 0.94-1.09[.037-.043] DIA.
6. PART NUMBER, DATE CODE MARKED THIS APPROXIMATE AREA.
7. MARKING ON THIS SIDE.
8. POST FINISH: DIN 41612 CLASS 2 IN CONTACT AREA AND LAST 5.08[.200] OF POST.
9. POST FINISH: DIN 41612 CLASS 3 IN CONTACT AREA AND LAST 5.08[.200] OF POST.
10. POST FINISH: DIN 41612 CLASS 2 IN CONTACT AREA AND TIN PLATE ON POST.

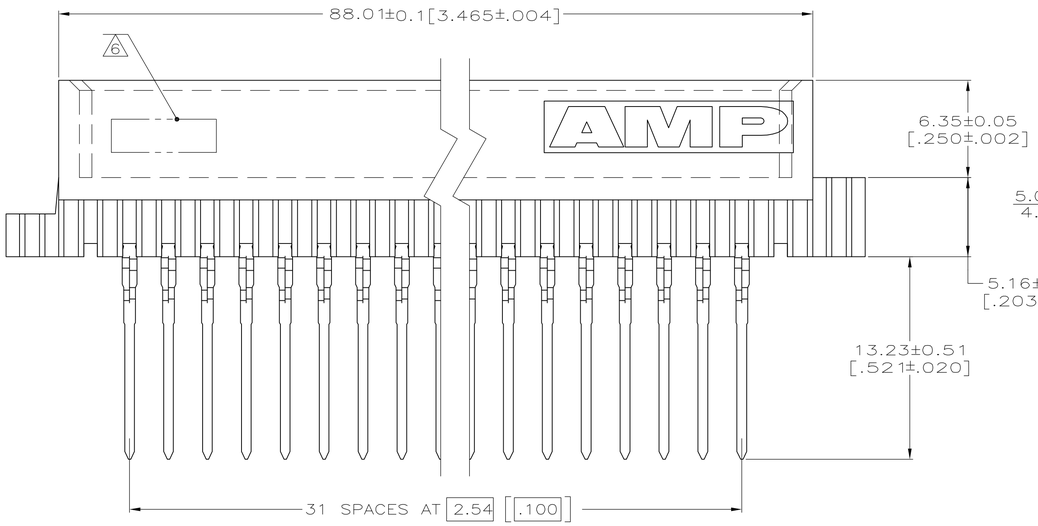

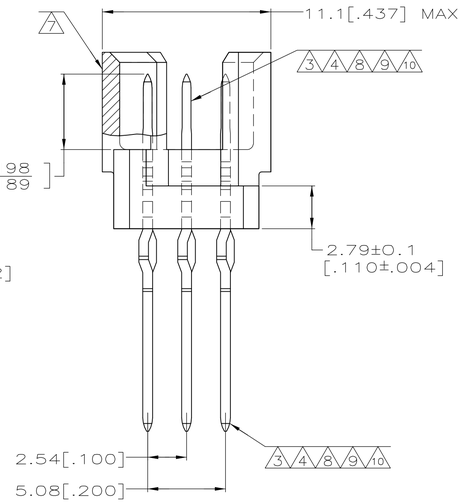

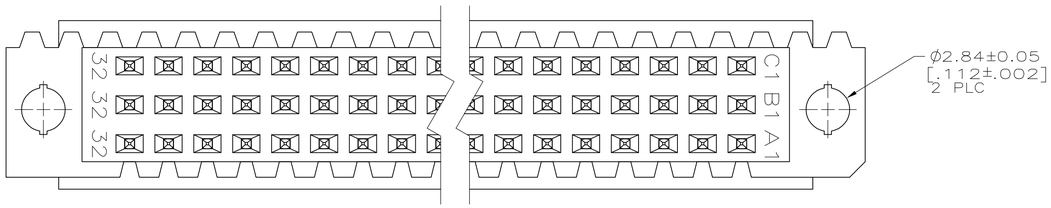

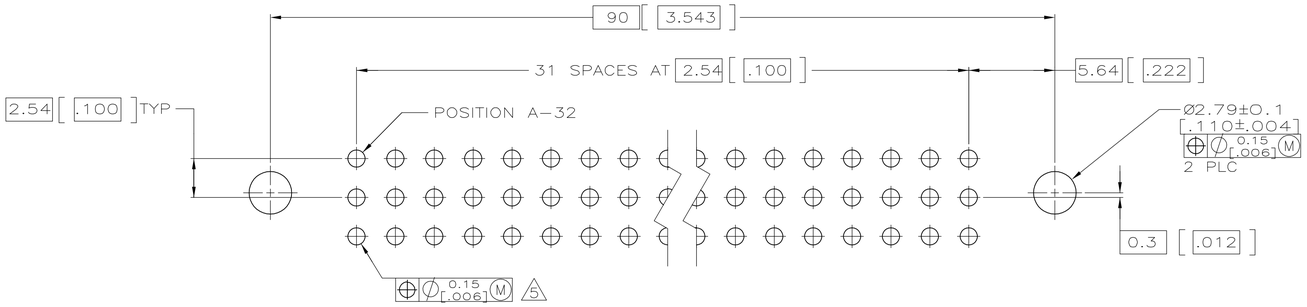

PC BOARD LAYOUT

NOTES	POSITIONS LOADED	ROWS LOADED C	ROWS LOADED B	ROWS LOADED A	NO. OF LOADED POSITION	ASSY PART NUMBER
OBSOLETE 10	1-32	X	X	X	96	7-650909-5
OBSOLETE 9	1-32	X	X	X	96	1-650909-9
8	1-32	X	X	X	96	1-650909-4
OBSOLETE 3	1-32	X	X	X	96	650909-9
4	1-32	X	X	X	96	650909-5

THIS DRAWING IS A CONTROLLED DOCUMENT.

DIMENSIONS: mm [INCHES]

TOLERANCES UNLESS OTHERWISE SPECIFIED:
0 PLC ± -
1 PLC ± -
2 PLC ± -
3 PLC ± 0.13[.005]
4 PLC ± -
ANGLES ± -

MATERIAL 1 2
FINISH 3 4 8 9 10

DWN L. BRINER 3/18/91
CHK D.C. RUBENDALL 3/26/91
APVD D.C. RUBENDALL 3/26/91
PRODUCT SPEC —
APPLICATION SPEC —
WEIGHT —

Tyco Electronics Corporation
Harrisburg, PA 17105-3608

NAME PIN ASSEMBLY, EUROCARD, TYPE R
—

SIZE	CAGE CODE	DRAWING NO	RESTRICTED TO
A1	00779	C-650909	—

CUSTOMER DRAWING

SCALE 5:1 SHEET 1 OF 1 REV M

AMP 4805 REV 31MAR2000