THIS DRAWING IS UNPUBLISHED. RELEASED FOR PUBLICATION -,- .
© COPYRIGHT - By - ALL RIGHTS RESERVED.

REVISIONS

P	LTR	DESCRIPTION	DATE	DWN	APVD
	V2	REVISED PER ECO-13-008672	02SEP2013	KH	DR
	W	REVISED PER ECO-17-011042	01AUG2017	RS	MZ

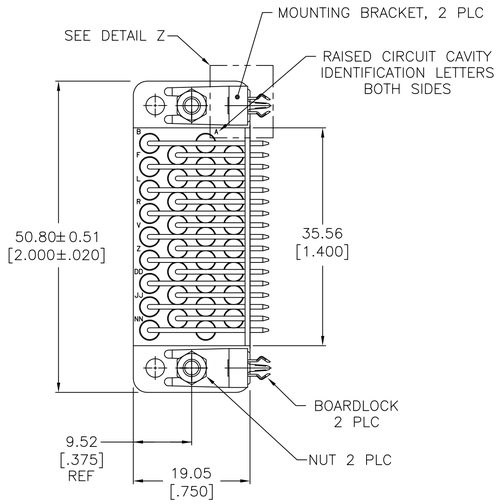

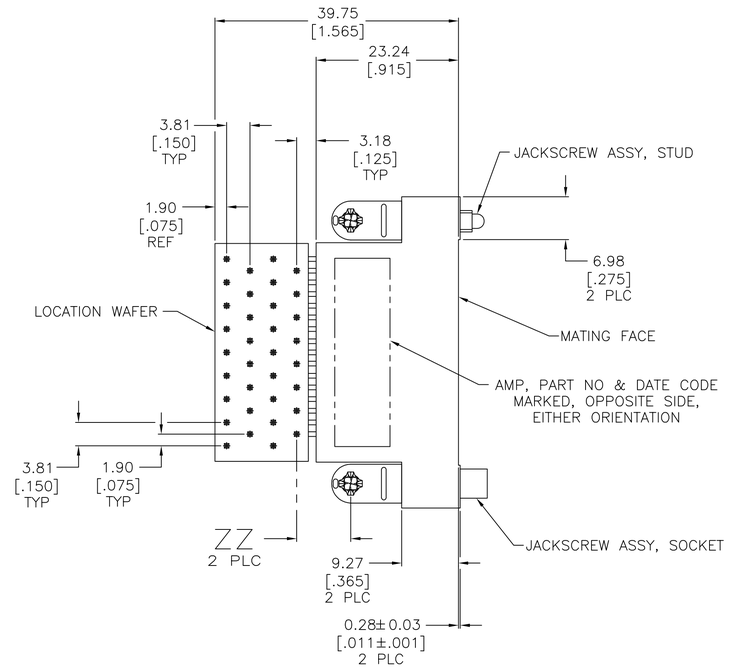

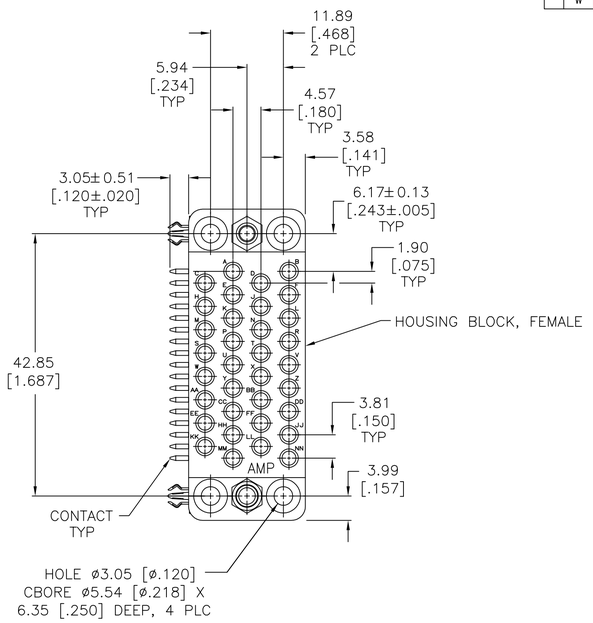

1. LETTERS ARE SHOWN ON PC BOARD LAYOUT FOR HOLE LOCATION PURPOSES ONLY.
2. MINERAL REINFORCED, FLAME RETARDANT PHENOLIC, BLACK.
3. JACKSCREW BODY: STAINLESS STEEL PER ASTM-A-582; LOCKWASHER: STAINLESS STEEL PER QQ-S-766; NUT: CARBON STEEL PER QQ-S-637; MOUNTING BRACKET: ZINC PER QQ-Z-363; BOARDLOCK: COPPER ALLOY PER ASTM-B-592.
4. PHENOLIC RESIN LAMINATE, BLACK.
5. BODY: BRASS PER MIL-C-50; SPRING: STAINLESS STEEL PER QQ-S-766; POST: BRASS PER ASTM-B-134.
6. NUT: ZINC PER ASTM-B-633; MOUNTING BRACKET: 3.81um [.000150] MIN NICKEL PER QQ-N-290. OVER 2.54um [.000100] MIN COPPER PER MIL-C-14550 PER MIL-C-14550; BOARDLOCK: 5.08um [.000200] MIN TIN-LEAD PER MIL-T-10727 OVER 1.27um [.000050] MIN NICKEL PER QQ-N-290, LOCKWASHER: PASSIVATED.
7. BODY: 0.76um [.000030] MIN GOLD PER MIL-G-45204 FOR A LENGTH OF 5.08 [.200] MIN FROM MATING END OF CONTACT, 2.54um[.000100] MIN TIN-LEAD PER MIL-T-10727 IN WIRE BARREL AREA, BOTH OVER 1.27um [.000050] MIN NICKEL PER QQ-N-290 ON ENTIRE CONTACT; POST: 2.54um [.000100] MIN TIN-LEAD PER MIL-T-10727 OVER 1.27um [.000050] MIN NICKEL PER QQ-N-290.
8. SELECT LOADED CIRCUITS ARE B,C,D,E,F,H,L,N,P,R,S,T,U,V,W,X,Y,AA,HH,KK AND NN.
9. SELECT LOADED CIRCUITS ARE A,B,C,D,E,F,H,J,L,M,N,P,R,S,T,U,V,W,X,Y,AA AND NN.
10. SELECT LOAD CIRCUITS A,B,C,D,E,F,H,P,R,S,T,U,R,S,T,U,V,W,X,Y,AA,BB, AND NN.
11. SELECT LOAD CIRCUITS A,B,C,D,E,F,H,J,K,L,N,P,R,S,T,U,V,W,X,Y,AA,BB, AND NN.
12. SELECT LOAD CIRCUITS A,B,C,D,E,F,H,K,L,N,P,R,S,T,U,V,W,X,Y,AA,BB, AND NN.
13. SELECT LOAD CIRCUITS A,B,C,D,E,F,H,J,L,N,P,R,S,T,U,V,W,X,Y,AA,HH, AND NN.
14. BULK PACKED KIT.
15. BODY: 0.76um [.000030] MIN GOLD PER MIL-G-45204 FOR A LENGTH OF 5.08 [.200] MIN FROM MATING END OF CONTACT, 2.54um[.000100] MIN TIN PER MIL-T-10727 IN WIRE BARREL AREA, BOTH OVER 1.27um [.000050] MIN NICKEL PER QQ-N-290 ON ENTIRE CONTACT; POST: 2.54um [.000100] MIN TIN PER MIL-T-10727 OVER 1.27um [.000050] MIN NICKEL PER QQ-N-290.
16. NUT: ZINC PER ASTM-B-633; MOUNTING BRACKET: 3.81um [.000150] MIN NICKEL PER QQ-N-290. OVER 2.54um [.000100] MIN COPPER PER MIL-C-14550 PER MIL-C-14550; BOARDLOCK: 5.08um [.000200] MIN TIN PER MIL-T-10727 OVER 1.27um [.000050] MIN NICKEL PER QQ-N-290, LOCKWASHER: PASSIVATED.
17. OBSOLETE PARTS: OBSOLETE CIS STREAMLINING PER D.RENAUD/D.SINISI

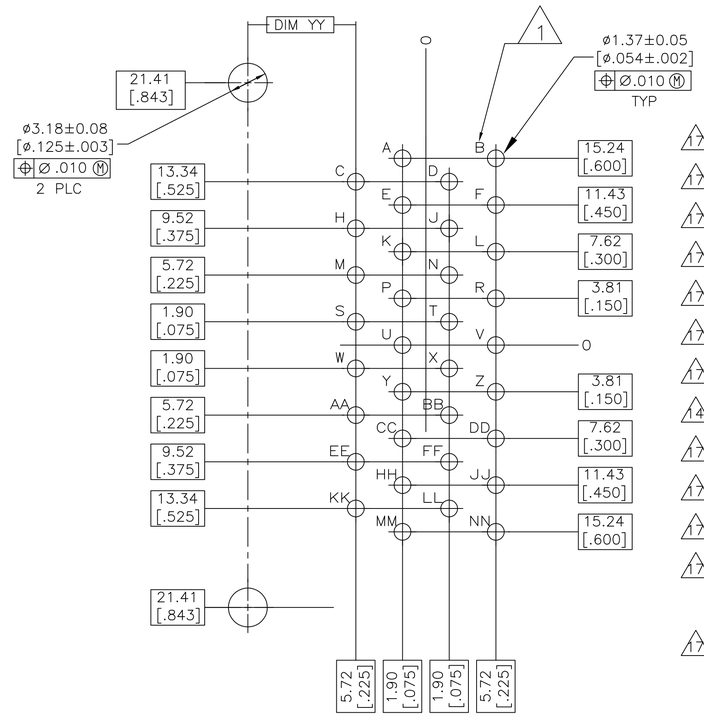

RECOMMENDED PC BOARD LAYOUT
SCALE 4:1
1.57 [.062] PC BOARD THICKNESS

17	OBSOLETE	15 16	8.81 [.347]	8.81 [.347]	NO	FULLY LOADED	14 1-213574-7
17	OBSOLETE	15 16	8.81 [.347]	8.81 [.347]	NO	11	1-213574-6
17	OBSOLETE	15 16	8.81 [.347]	8.81 [.347]	YES	13	1-213574-5
17	OBSOLETE	15 16	8.81 [.347]	8.81 [.347]	YES	12	1-213574-4
17	OBSOLETE	15 16	8.81 [.347]	8.81 [.347]	YES	11	1-213574-3
17	OBSOLETE	15 16	8.81 [.347]	8.81 [.347]	YES	10	1-213574-2
17	OBSOLETE	15 16	8.81 [.347]	8.81 [.347]	YES	FULLY LOADED	1-213574-1
14	OBSOLETE	7 6	8.81 [.347]	8.81 [.347]	NO	FULLY LOADED	1-213574-0
17	OBSOLETE	7 6	8.81 [.347]	8.81 [.347]	NO	11	213574-9
17	OBSOLETE	7 6	8.38 [.330]	8.38 [.330]	YES	13	213574-8
17	OBSOLETE	7 6	8.81 [.347]	8.81 [.347]	YES	12	213574-7
17	OBSOLETE	7 6	8.81 [.347]	8.81 [.347]	YES	11	213574-6
	OBSOLETE	–	8.81 [.347]	8.81 [.347]	NO	FULLY LOADED	213574-5
17	OBSOLETE	7 6	8.81 [.347]	8.81 [.347]	YES	10	213574-4
	OBSOLETE	–	8.81 [.347]	8.81 [.347]	YES	9	213574-3
		7 6	8.81 [.347]	8.81 [.347]	YES	FULLY LOADED	213574-2
	OBSOLETE	–	8.81 [.347]	8.81 [.347]	YES	8	213574-1
	CONTACT/BOARDLOCK PLATING		ZZ	YY	DIMPLE	CIRCUIT CAVITIES LOADED	PART NUMBER

THIS DRAWING IS A CONTROLLED DOCUMENT.

DIMENSIONS: mm [INCHES]

TOLERANCES UNLESS OTHERWISE SPECIFIED:
0 PLC ± –
1 PLC ± –
2 PLC ± 0.25 [.010]
3 PLC ± –
4 PLC ± –
ANGLES ± –

MATERIAL
HOUSING: 2
HARDWARE: 3
CONTACT: 4
LOCATION WAFER: 5

FINISH
HARDWARE: 6
CONTACT: 7

DWN C RICHARD 11/27/89
CHK R STONE 12-4-89
APVD –
PRODUCT SPEC –
APPLICATION SPEC –
WEIGHT –

TE Connectivity

NAME: CONNECTOR ASSEMBLY, SOCKET, 34 POSITION, RIGHT ANGLE, WITH BOARDLOCKS, M SERIES

SIZE	CAGE CODE	DRAWING NO	RESTRICTED TO
A1	00779	C-213574	–

CUSTOMER DRAWING | SCALE 2:1 | SHEET 1 OF 1 | REV W

4805 (1/15)