api technologies corp.
Spectrum Control

Through-hole Filters

High Frequency PCB Filters

API Technologies' Spectrum Control line of high frequency PCB filter provides EMI filtering to protect low power digital circuits, while meeting most government and industrial specifications for EMI control. With low assembly and installation costs, the PCB filter helps keep your project on budget. By mounting the PCB filter at the source of the problem, we eliminate the need for additional filtering at other points in the circuit. The filter mounts directly to a printed circuit board with no mounting bracket or plate needed, providing you with a lower total installed cost. In addition, the PCB filter can be flow-soldered with other components.

API's PCB filter has built-in standoffs, which allow for cleaning or coating beneath the filter, and the filter is encapsulated for environmental protection.

Features

- Provides EMI filtering to protect low power digital circuits - helps equipment meet FCC and VDE specifications
- Mounts directly to printed circuit board with no bracket or plate for lower applied costs - can be flow soldered with other components
- Encapsulated for environmental protection
- Mounts on PCB to begin filtering at the source of the problem
- Built-in standoffs permit cleaning or coating under the filter

Circuit Schematic

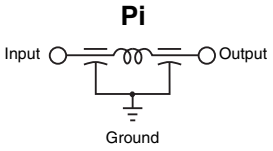

Typical Electrical Characteristics

Current . . . . . Max. 10A DC; 0.3A RF

Operating Voltage . . . . . Max. 50 VDC, -25°C to +85°C

Capacitance . . . . . 800 pF min.

Dissipation Factor . . . . . 0.1 Max.

Dielectric Withstanding Voltage . . . . . 125 VDC for 5 seconds

Insulation Resistance . . . . . Min. 100 MegOhms at 100 VDC for 2 minutes and 25°C

Direct Current Resistance . . . . . 0.002 ohms Max.

Minimum No-Load Insertion Loss . . . . . Per MIL-STD-220 at 25°C; PCB mounted, 50 ohm strip line

3dB @ 8 MHz
10dB @ 25 MHz
15dB @ 50 MHZ
20dB @ 100 MHz-1GHz

Preformed to Recommended Mounting Configuration
Part Number 842448-2

Recommended Mounting Configuration

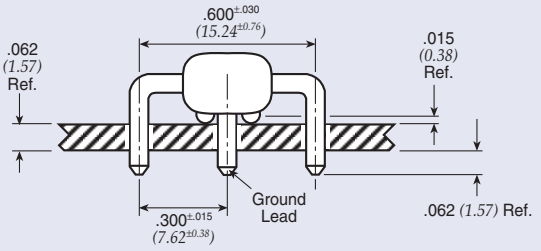

Dimensions in inches *(mm)*

Recommended PCB Hole Layout

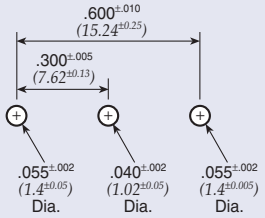

Dimensions in inches *(mm)*

Standard Configuration **Part Number 842448-1**

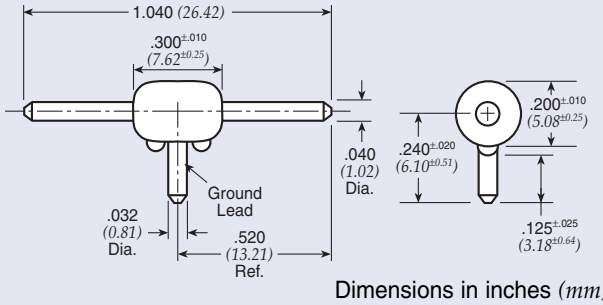

Dimensions in inches *(mm)*

API TECHNOLOGIES • 8061 Avonia Rd. • Fairview, PA 16415 • Ph: 814-474-1571 • Fax: 814-474-3110 • eis.apitech.com
API TECHNOLOGIES' SPECTRUM CONTROL GmbH • Hansastrasse 6 • 91126 Schwabach, Germany • Phone: (49)-9122-795-0 • Fax: (49)-9122-795-58