THIS DRAWING IS UNPUBLISHED. RELEASED FOR PUBLICATION -,- .
© COPYRIGHT - By - ALL RIGHTS RESERVED.

LOC	DIST
—	—

REVISIONS

P	LTR	DESCRIPTION	DATE	DWN	APVD
	B	RESIN CHANGE FROM EXISTING PBT TO READILY AVAILABLE PBT	09OCT2015	KJK	PS

Pos.	L±0.3	PART NUMBER	
–	–	–	
2	10.16	~~827 235 –2~~	△2 OBSOLETE
3	17.78	~~–3~~	
4	25.40	~~–4~~	
5	33.02	~~–5~~	
6	40.64	–6	
7	48.26	–7	
8	55.88	–8	
9	63.50	–9	
10	71.12	~~1– –0~~	OBSOLETE △2
11	78.74	1– –1	
12	86.36	1– –2	
13	93.98	~~1– –3~~	OBSOLETE △2
14	101.60	1– –4	
15	109.22	1– –5	
16	116.84	1– –6	
17	124.46	1– –7	
18	132.08	1– –8	
19	139.70	1– –9	
20	147.32	2– –0	
20	152.20	~~8 827 235 1~~	OBSOLETE △2

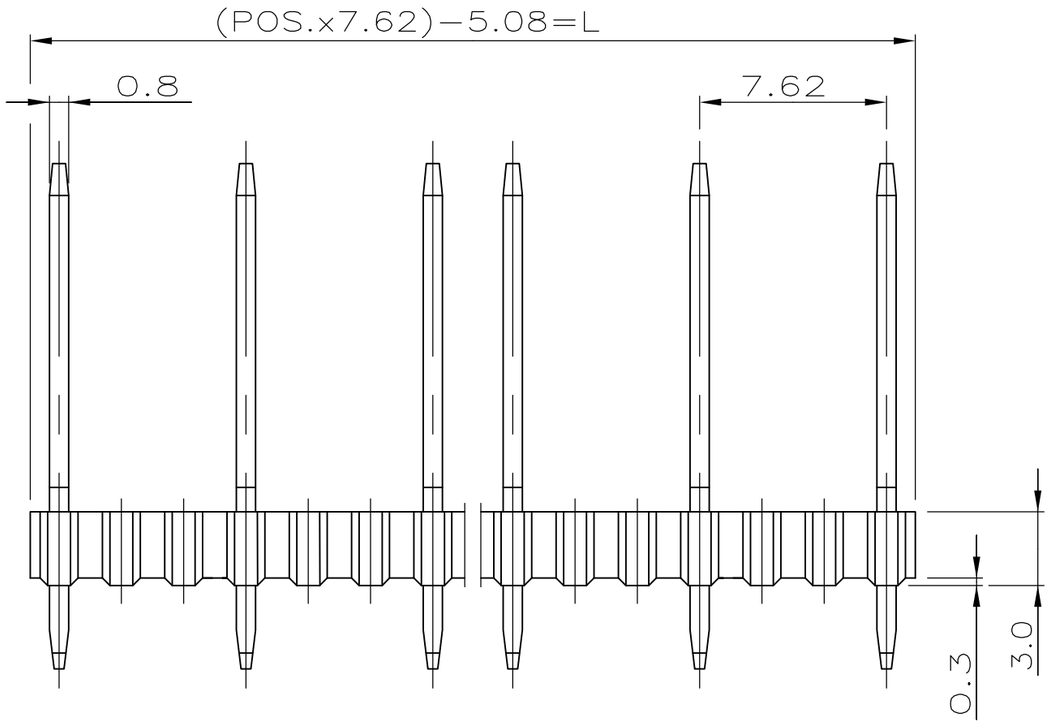

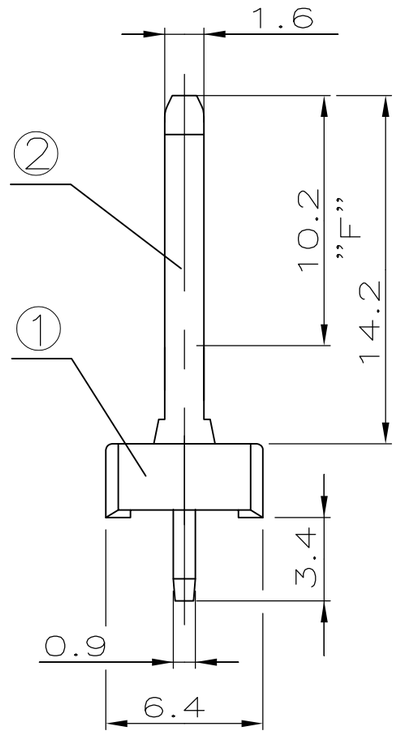

NOTES:

△1 MATING SIDE: 0.8µm GOLD BY AREA "F" OVER 1.27µm NICKEL
SOLDER SIDE: 2.5–5µm TIN OVER 1.27µm NICKEL

△2 OBSOLETE PARTS: OBSOLETE CIS STREAMLINING PER D.RENAUD/D.SINISI

△2 ~~8–827235–1~~ WIE GEZEICHNET

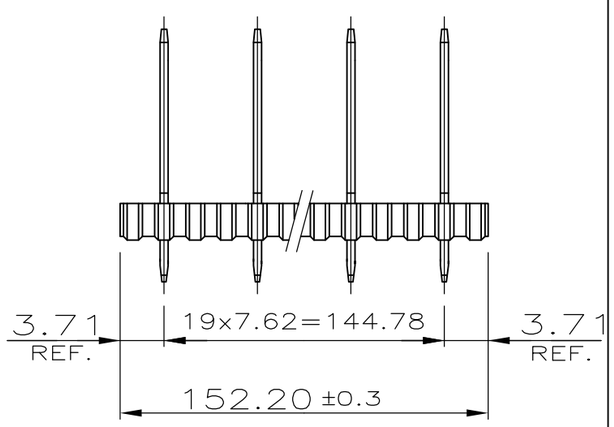

M 2:1

ITEM NO	DESCRIPTION	MATERIAL	COLOR/ FINISH
②	CONTACT PIN	CuZn	△1
①	PIN HOUSING	PBT GV	GREEN

THIS DRAWING IS A CONTROLLED DOCUMENT.

DIMENSIONS: mm

TOLERANCES UNLESS OTHERWISE SPECIFIED: ±0.2mm
0 PLC ± –
1 PLC ± –
2 PLC ± –
3 PLC ± –
4 PLC ± –
ANGLES ± –

MATERIAL: SEE TABLE

FINISH: △1

DWN R. JAGER 18.05.81
CHK –
APVD BOCK
PRODUCT SPEC –
APPLICATION SPEC –
WEIGHT –

TE Connectivity

NAME: AMPMODU I PIN HEADER,PITCH 7.62 SINGLE ROW

SIZE	CAGE CODE	DRAWING NO	RESTRICTED TO
A3	00779	C-827235	–

CUSTOMER DRAWING | SCALE 4:1 | SHEET 1 OF 1 | REV B