THIS DRAWING IS UNPUBLISHED. RELEASED FOR PUBLICATION -,- .
© COPYRIGHT - By - ALL RIGHTS RESERVED.

REVISIONS

| P | LTR | DESCRIPTION | DATE | DWN | APVD |
|---|---|---|---|---|---|
| | AW8 | REVISED PER ECR-15-014073 | 10FEB17 | HG | TD |

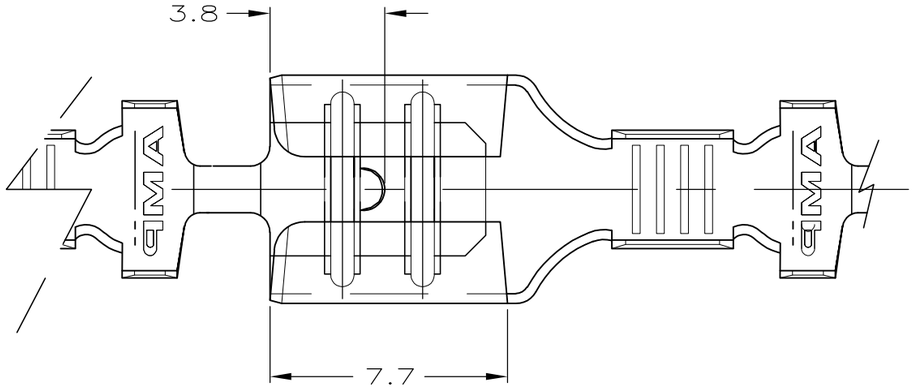


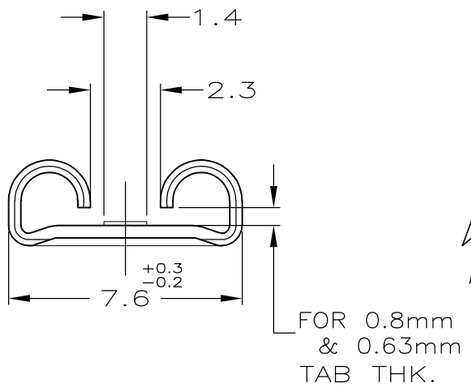


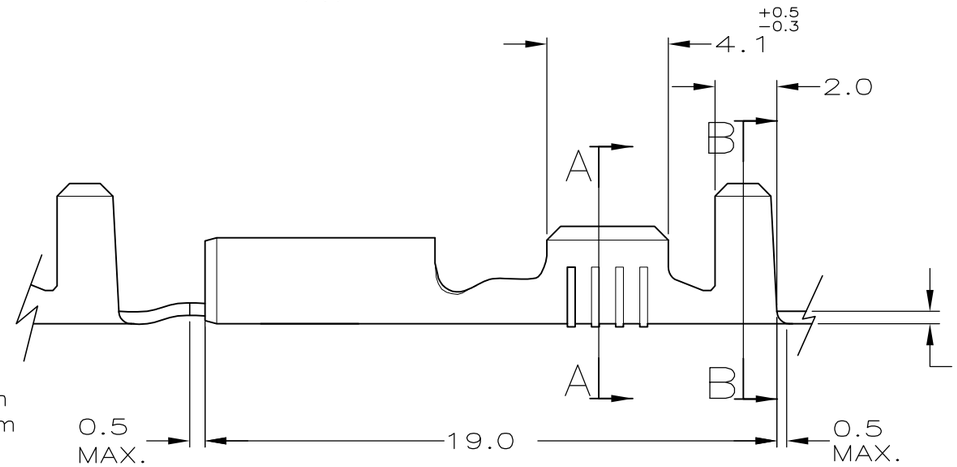


1) STATO DI FORNITURA – SCALA 1:1
(SUPPLY CONDITION – SCALE 1:1)

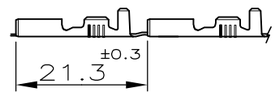


SENSO DI USCITA DEL TERMINALE DALLA BOBINA
(DIRECTION OFF TOP OF REEL)

2) SPECIFICA DI PRODOTTO 108–20019
(PRODUCT SPEC. 108–20019)
SPECIFICA DI APPLICAZIONE 114–20023
(APPLICATION SPEC. 114–20023).

3) PER LE VERSIONI IN PEZZI SCIOLTI VEDERE DISEGNO 160506
(FOR LOOSE PIECE VERSION SEE DRAWING 160506).

4) NON IN PRODUZIONE
(NOT YET RELEASE FOR PRODUCTION)

5) ADATTO PER ALTA FORZA DI ESTRAZIONE
(SUITABLE FOR HIGHER EXTRACTION FORCE)

6) ADATTO PER TAB SPESSO 0.63mm.
(FOR 0.63mm TAB THK.)

7) PACKAGE WITH INTERLAYER PAPER

SEZIONE A–A
(SECTION A–A)

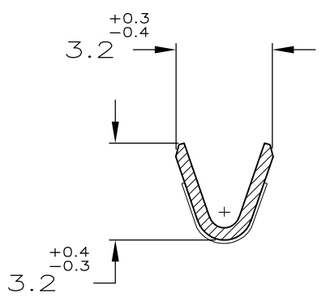


SEZIONE B–B
(SECTION B–B)

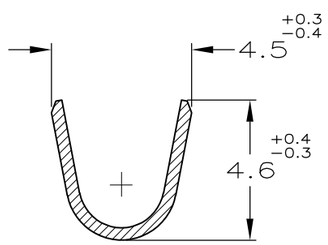


| NOTE (NOTES) | FINITURA (FINISH) | MATERIALE (MATERIAL) | NUMERO (P/N) | REV |
|---|---|---|---|---|
| 7 4 | STAGNATO (TINPLATED) | OTTONE (BRASS) | 7–160432–4 | AY |
| 6 4 | STAGNATO (TINPLATED) | OTTONE (BRASS) | 7–160432–3 | AY |
| 5 4 | STAGNATO (TINPLATED) | OTTONE (BRASS) | 7–160432–2 | AW |
| 5 4 | NUDO (UNPLATED) | OTTONE (BRASS) | 7–160432–1 | AW |
| | STAGNATO (TINPLATED) | OTTONE (BRASS) | 7–160432–0 | AU |
| | NUDO (UNPLATED) | BRONZO FOSF. (PH. BRONZE) | 6–160432–4 | AU |
| | PRE NICHELATO (PRE NICKEL PLATED) | ACCIAIO (STEEL) | 6–160432–3 | AU |
| | STAGNATO (TINPLATED) | BRONZO FOSF. (PH. BRONZE) | 6–160432–0 | AU |
| | ARGRNTATO (SILVER PLATED) | OTTONE (BRASS) | 5–160432–7 | AW |
| | STAGNATO (TINPLATED) | OTTONE (BRASS) | 5–160432–4 | AU |
| | NUDO (UNPLATED) | OTTONE (BRASS) | 5–160432–3 | AW |

THIS DRAWING IS A CONTROLLED DOCUMENT.

DIMENSIONS: mm

TOLERANCES UNLESS OTHERWISE SPECIFIED: ±0.3
0 PLC ±
1 PLC ±
2 PLC ±
3 PLC ±
4 PLC ±
ANGLES ±2°

MATERIAL / MATERIALE: SEE TABLE (VEDI LA TABELLA)
FINISH / FINITURA: SEE TABLE (VEDI LA TABELLA)

DWN H.YAALI 14 MAY 99
CHK C.TARTARI 14 MAY 99
APVD –
PRODUCT SPEC –
APPLICATION SPEC 2
WEIGHT 0.785

TE Connectivity

NAME: FASTON® Connector .250 SERIES REC. CONTACT

| SIZE | CAGE CODE | DRAWING NO | RESTRICTED TO |
|---|---|---|---|
| A3 | 00779 | C-160432 | – |

CUSTOMER DRAWING | SCALE – | SHEET 1 OF 1 | REV AW8

# Mouser Electronics

Authorized Distributor

Click to View Pricing, Inventory, Delivery & Lifecycle Information:

TE Connectivity:

5-160432-4 5-160432-4 (Mouser Reel) 5-160432-4 (Cut Strip)