THIS DRAWING IS UNPUBLISHED. RELEASED FOR PUBLICATION -,- .
© COPYRIGHT - By - ALL RIGHTS RESERVED.

LOC	DIST
G	14

REVISIONS

P	LTR	DESCRIPTION	DATE	DWN	APVD
	P1	REVISED PER ECO-11-004820	11MAR11	RK	HMR

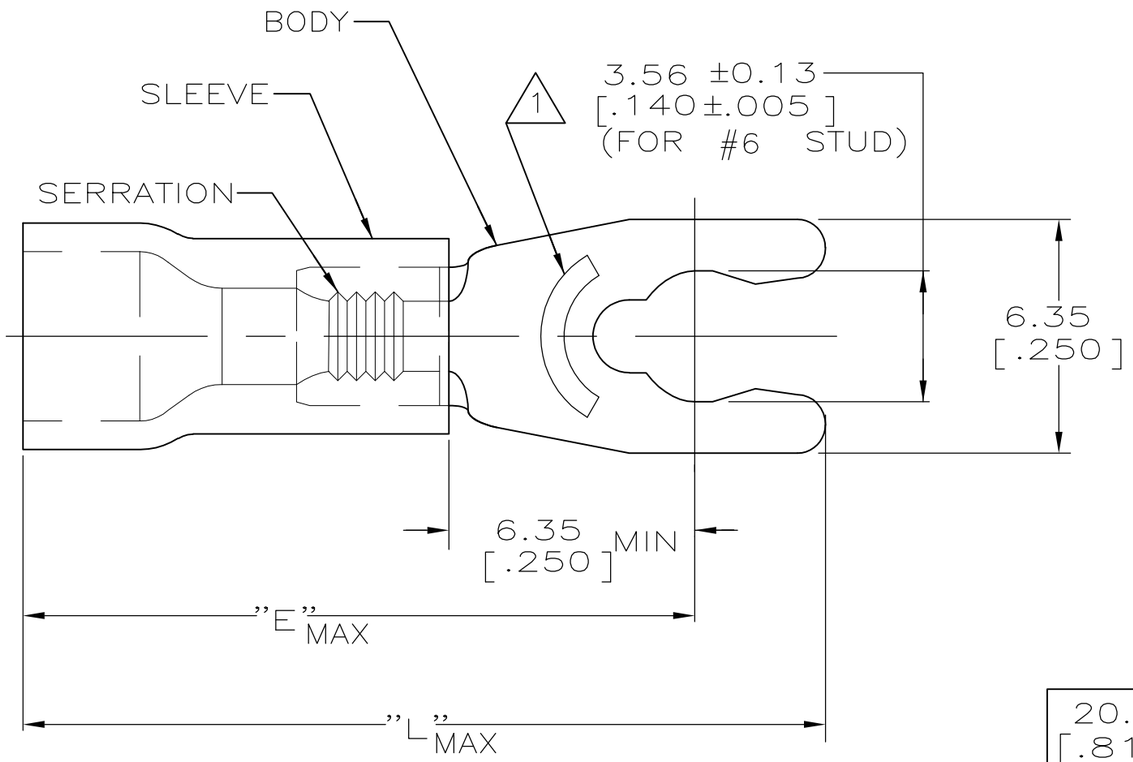

AMP WIRE RANGE	Listed FILE E13288	LR7189 Certified
22-16 AWG SOLID OR STRANDED	22-16 AWG SOLID OR STRANDED	22-16 AWG SOLID OR STRANDED

1. STAMP 6S AMP 22-18* APPROX AS SHOWN 22-16 TERMINALS ARE STAMPED 22-18 IN ACCORDANCE WITH MILITARY SPEC MIL-T-7928 COMMERCIAL WIRE RANGE IS 22-16
2. SEE TABLE FOR WIRE INSUL DIA
3. TONGUE MATL THK, 0.79±0.05 [.031±.002]
4. MATERIAL: BODY - BRASS PER ASTM B36
   SLEEVE - PVC, COLOR - RED

L	E	WIRE INSUL DIA	QTY	PACKAGE TYPE	PART NO
20.60 [.811]	16.92 [.666]	2.67-3.56 [.105-.140]	100	LOOSE PIECE, BOX	8-52949-1
21.84 [.860]	18.16 [.715]	3.81-5.08 [.150-.200]	2500	ON TAPE, REEL	52949-3
21.84 [.860]	18.16 [.715]	3.81-5.08 [.150-.200]	1000	LOOSE PIECE	52949-2
20.60 [.811]	16.92 [.666]	2.67-3.56 [.105-.140]	5000	ON TAPE, REEL	52949-1
20.60 [.811]	16.92 [.666]	2.67-3.56 [.105-.140]	1000	LOOSE PIECE	52949

AMP INCORPORATED
CUSTOMER SERVICE SYSTEMS

FOR ADDITIONAL PRODUCT INFORMATION OR COPIES OF DRAWINGS AND TECHNICAL DOCUMENTS	PRODUCT INFORMATION CENTER 1-800-522-6752
FOR APPLICATION TOOLING INFORMATION	TOOLING ASSISTANCE CENTER 1-800-722-1111
FOR ORDER ENTRY	1-800-526-5142

MAX RECOMMENDED OPERATING TEMPERATURE: 105°C [221°F]

VOLTAGE RATING: 600V MAX (1000V FIXTURE OR SIGN)

CIRCULAR MIL AREA: 0.26-1.65mm² [509-3260] SOLID OR STRANDED

THIS DRAWING IS A CONTROLLED DOCUMENT FOR AMP INCORPORATED. IT IS SUBJECT TO CHANGE AND THE CONTROLLING ENGINEERING ORGANIZATION SHOULD BE CONTACTED FOR THE LATEST REVISION.

THIS DRAWING IS A CONTROLLED DOCUMENT.

DIMENSIONS: mm[INCHES]

TOLERANCES UNLESS OTHERWISE SPECIFIED:
0 PLC ±-
1 PLC ±-
2 PLC ± 0.20 [.008]
3 PLC ±-
4 PLC ±-
ANGLES ±-

MATERIAL - 4

FINISH TIN PER ASTM B545

DWN	L OLMEDA	26JUN95
CHK	M ELLIS	26JUN95
APVD	G NGO	26JUN95
PRODUCT SPEC	UL 486A	
APPLICATION SPEC	—	
WEIGHT	—	

TE Connectivity

NAME: TERMINAL, SPRING SPADE, SHORT, PLASTI-GRIP, WIRE SIZE: 22-16

SIZE	CAGE CODE	DRAWING NO	RESTRICTED TO
A3	00779	C-52949	—

CUSTOMER DRAWING | SCALE 6:1 | SHEET 1 OF 1 | REV P1

1470-19 (3/11)