MICRO SWITCH
FREEPORT, ILLINOIS, U.S.A.
A DIVISION OF HONEYWELL
FED. MFG. CODE 91929

SWITCH - ENCLOSED

CATALOG LISTING
BZG1-2RN62

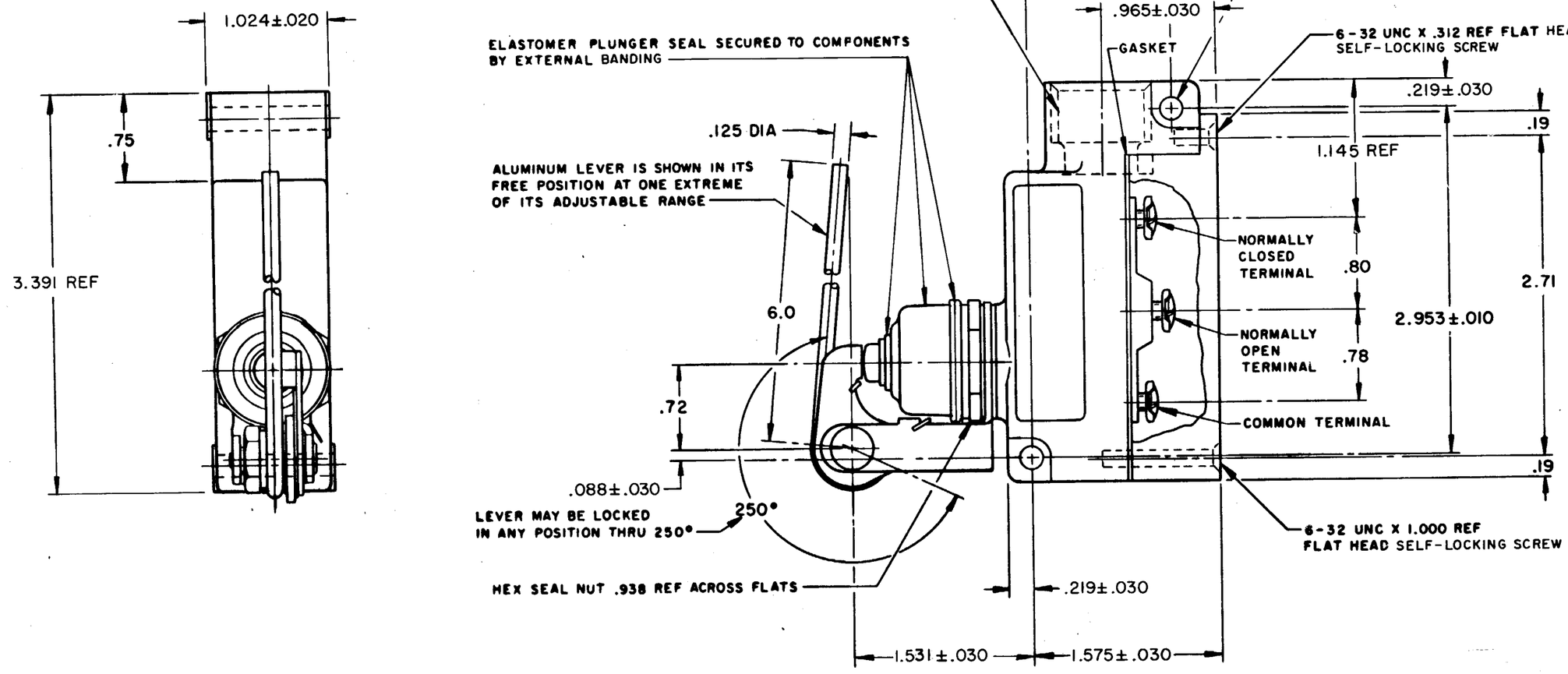

THIS DRAWING COVERS A PROPRIETARY ITEM AND IS THE PROPERTY OF MICRO SWITCH, A DIVISION OF MINNEAPOLIS-HONEYWELL REGULATOR CO. THIS DRAWING IS NOT TO BE COPIED OR USED WITHOUT THE APPROVAL OF MICRO SWITCH.

CHARACTERISTICS

OPERATING FORCE - - - - - - - - 3-7 OZ

RELEASE FORCE - - - - - - - - - 1 OZ MIN
PRETRAVEL - - - - - - - - - - - .718 MAX
DIFFERENTIAL TRAVEL - - - - - .229 MAX
OVERTRAVEL - - - - - - - - - - .838 MIN

SWITCH-BASIC REPLACEMENT - - - BZ-2RN702

ELECTRICAL DATA

CONTACT ARRANGEMENT
S P D T

15A-125, 250 OR 480 VAC, 2A-600 VAC
1/8HP-125 VAC; 1/4HP-250 VAC
CODE L74 1/2A-125 VDC; 1/4A-250 VDC

SCALE FULL
DO NOT SCALE PRINT

UNLESS OTHERWISE NOTED
DIMENSIONS ARE IN INCHES
TOLERANCES ARE:

ONE PLACE	(.0)	±.030
TWO PLACE	(.00)	±.015
THREE PLACE	(.000)	±.005
ANGLES		±

WEIGHT

NOTE -
1 - 6-32 UNC X .219 REF BINDING HEAD TERMINAL SCREW AND CUPWASHER (3)

2 - ROD LEVER BRACKET ASSEMBLY MAY BE SET AT ANY POSITION AROUND AXIS OF PLUNGER

DRAWN	OMW	25 FEB 70	
CHECK	RAW	5 MAR 70	
CHECK			
CHECK	E	5 MAR 70	
CHECK	WHE	5 MAR 70	
CHECK			

REVISIONS

A	PR-1341	R E R 17 JUL 70
B	C028612	M B S 11 FEB 71
C	C057675	K P K 23 SEP 76
D	CO 55989	W J M 1 NOV 84
E	C072977	G J W 8 AUG 92
F	CO-77179-C	MAM 12 MAR 94

REPLACES
RELEASE NO. PR-1341
DRAWING NUMBER M BZG1-2RN62
ISSUE X 7 X 8 X

PO-80378-003