THIS COPY IS PROVIDED ON A RESTRICTED BASIS AND IS NOT TO BE USED IN ANY WAY DETRIMENTAL TO THE INTERESTS OF PANDUIT CORP.

NOTES:

1. KIT COMES FULLY ASSEMBLED
2. KIT INCLUDES BUSBAR, MOUNTING BRACKETS, INSULATORS, AND MOUNTING HARDWARE.
3. DIMENSIONS IN PARENTHESIS ARE MILLIMETERS.

C UL US
LISTED
GROUNDING AND BONDING EQUIPMENT

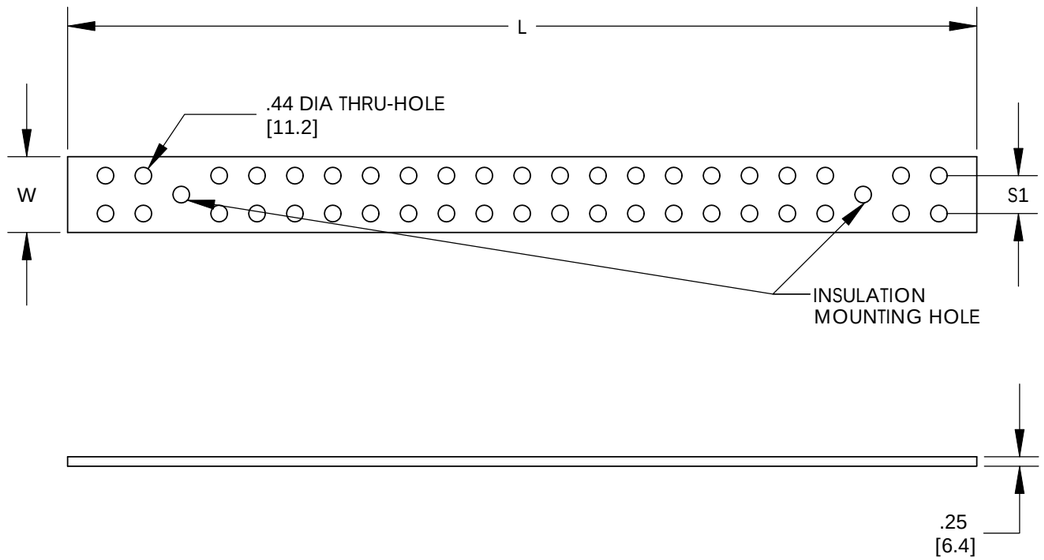

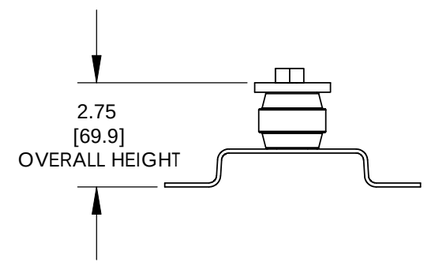

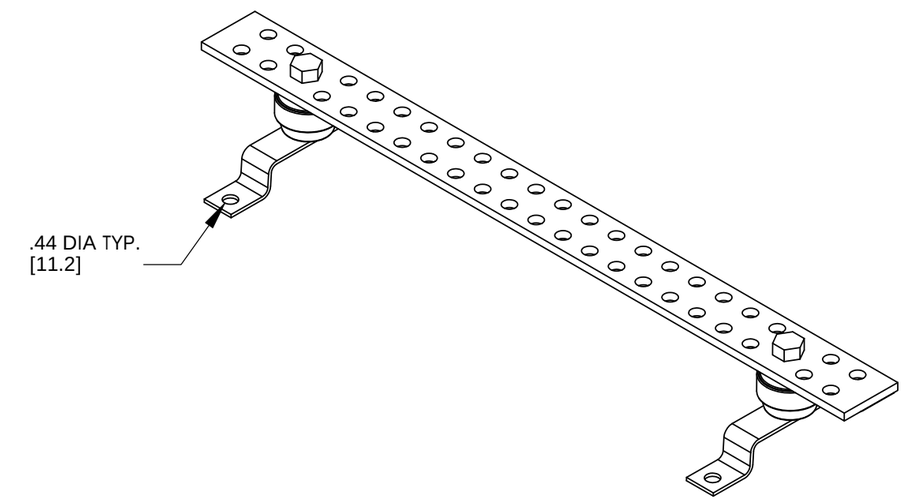

ASSEMBLED AS SHOWN

PANDUIT PART NUMBER	DIMENSIONS - IN [mm]		HOLE PATTERN INFORMATION			MOUNTING BRACKET HARDWARE	MOUNTING KIT QUANTITY
	L	W	HOLE SIZE	HOLE SPACING	# OF HOLE SETS		
GB2D0008TPI-1	12.00 [304.8]	2.00 [50.8]	7/16"	1.00	8 SETS	BUTTON HEAD SCREW	2
GB2D0021TPI-1	24.00 [609.6]	2.00 [50.8]	7/16"	1.00	21 SETS	BUTTON HEAD SCREW	2
GB2D0033TPI-1	36.00 [914.4]	2.00 [50.8]	7/16"	1.00	33 SETS	BUTTON HEAD SCREW	2
GB2D0044TPI-1	48.00 [1219.2]	2.00 [50.8]	7/16"	1.00	44 SETS	HEX BOLT	3
GB2D0056TPI-1	60.00 [1524.0]	2.00 [50.8]	7/16"	1.00	56 SETS	HEX BOLT	3

REV	DATE	BY	CHK	DESCRIPTION	ECN	-R	SUP
05	12/10	JHNU	JHNU	REVISED AGENCY LOGO	N41743BB-C41743	FLD	FLD
04	01/09	JESH	JESH	UPDATED TITLE BLOCK "D" PATTERN GROUNDING BUS BARS CUSTOMER DRAWING. WAS "A" PATTERN GROUNDING BUS BARS CUSTOMER DRAWING			
03	11/08	JHNU	JHNU	REVISED DRAWING LAYOUT, REMOVED BRACKET VIEWS			
02	11/08	JHNU	DWDA	ADDED MOUNTING HARDWARE COLUMN TO TABLE			
01	7/08	JHNU	DWDA	ADDED HOLE PATTERN COLUMN TO TABLE			
00	5/08	JHNU	DWDA	DRAWING RELEASED			

PANDUIT CORP. TINLEY PARK, ILLINOIS

"D" PATTERN GROUNDING BUSBARS CUSTOMER DRAWING

UNLESS OTHERWISE SPECIFIED DIMENSIONAL TOLERANCES ARE:
(.X) ± (.XXX) ±
(.XX) ± ANGLES ±

UNLESS OTHERWISE SPECIFIED, ALL DIMENSIONS ARE GIVEN IN INCHES, THIRD ANGLE PROJECTION

DRAWN BY: JHNU
MAT'L:
DATE: 1/08
CHK'D:
SCALE: NONE
DRAWING NO / CAD FILE: C41743_05
DWG SIZE: B