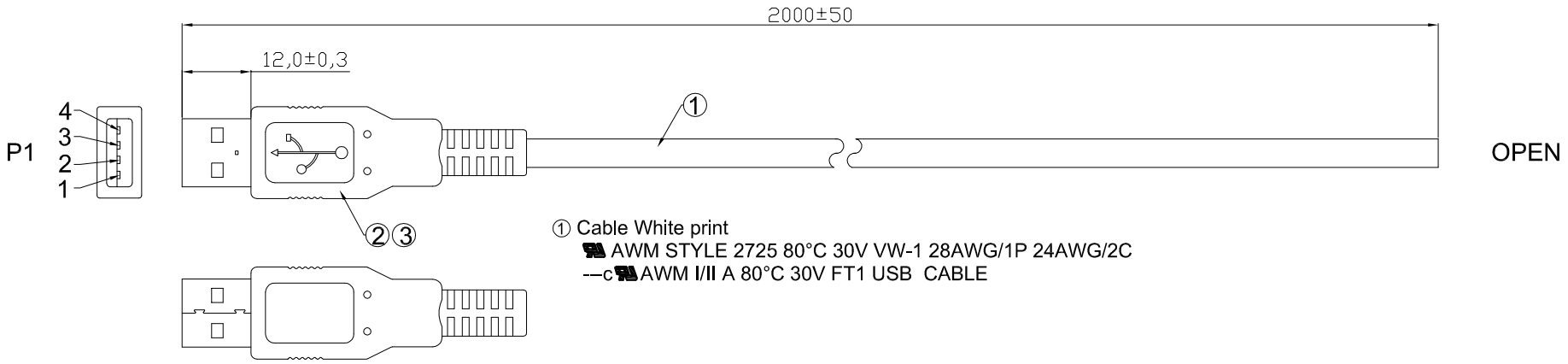

① Cable White print
AWM STYLE 2725 80°C 30V VW-1 28AWG/1P 24AWG/2C
--c AWM I/II A 80°C 30V FT1 USB CABLE

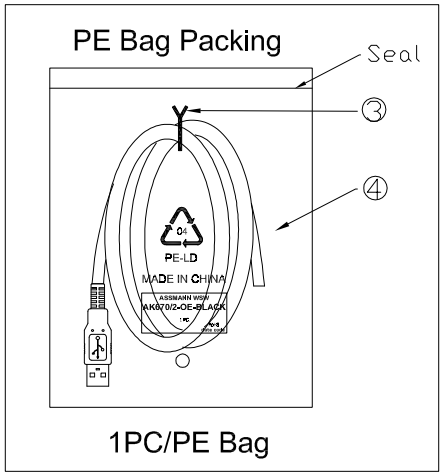

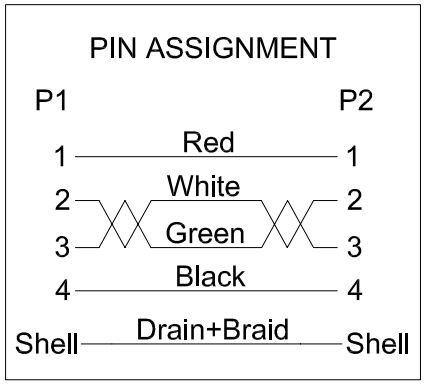

Electrical test:
1. 100% short, open, miss wire test
2. Conduct resistance: 2 Ohm max.
3. Insulator resistance: 5MΩ min.
4. Dielectric test: DC 300V

NO.	NAME.	Q'TY	SPECIFICATION
⑤	PE Bag	1	Clear Print black "MADE IN CHINA"+ "1PC"
④	TIE	1	Black
③	Out Jacket	NA	Black PVC-45P
②	CONN	1	USB A Male Shell:Nickel Pin:G/F Insulator color:White
①	Cable	1	USB2.0 UL2725 28#/1P+24#/2C+AEB OD:4.7mm Black

RoHS compliant
Unit: mm

Scale	Free				Date	Name	Customer-No.
TOLERANCE				Drawn	10.12.2015	Joanna	
				Approved	09.05.2016	Amy	ASSMANN WSW-No. AK670/2-OE-BLACK
DIM	TOL	①	Update the drawing	09.05.2016	Amy		Drawing-No. ASS 7474 CA rev01
		⓪	Drawn	10.12.2015	Joanna		
Angle	TOL	Id.	Modification	Date	Name		Replace / Sheet

ASSMANN WSW components

KK2292