THIS DRAWING IS UNPUBLISHED. RELEASED FOR PUBLICATION -,- .
© COPYRIGHT - BY TYCO ELECTRONICS CORPORATION. ALL RIGHTS RESERVED.

LOC	DIST
AD	00

REVISIONS

P	LTR	DESCRIPTION	DATE	DWN	APVD
	P	EC 0G3C 0218 05	29APR05	BSV	JLG
	P1	REVISED PER ECO-09-021826	8JAN10	KK	AEG

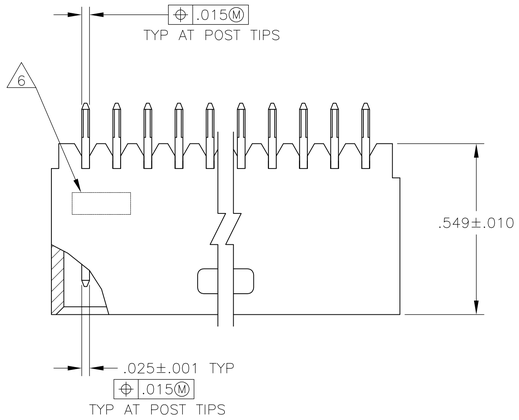

1. FOR 3 POSITION ONLY (.215 WIDE).
2. STANDOFFS: UP TO 9 POS-(2 REQD) ON THE OUTSIDE ENDS OF THE HOUSING
   10 TO 19 POS-(3 REQD) TWO ON THE OUTSIDE ENDS AND ONE CENTERED ON THE HOUSING
   19 POS AND LARGER-(4 REQD) TWO ON THE OUTSIDE ENDS AND TWO SPACED EVENLY
   WITHIN THE REMAINING LENGTH OF THE HOUSING.
3. POINT OF MEASUREMENT FOR PLATING THICKNESS.
4. .000030 GOLD ON THE CONTACT AREA, .000100-.000200 MATTE TIN-LEAD
   ON THE SOLDERTAIL, ALL OVER .000050 NICKEL.
5. OBSOLETE PART NUMBER
6. RECESSED DATE CODE
7. .000030 GOLD ON THE CONTACT AREA, .000100-.000200 MATTE TIN
   ON THE SOLDERTAIL, ALL OVER .000050 NICKEL.
8. MATERIAL: HOUSING- FLAME RETARDANT THERMOPLASTIC, COLOR- BLACK.
   POSTS- COPPER ALLOY
9. OBSOLETE PARTS: OBSOLETE CIS STREAMLINING PER D.RENAUD/D.SINISI

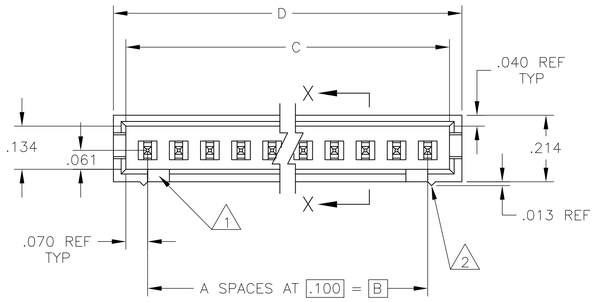

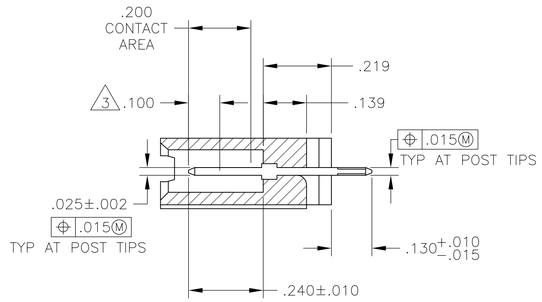

SECTION X-X

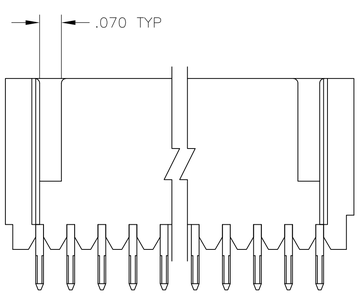

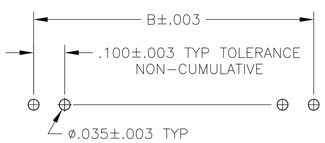

RECOMMENDED HOLE LAYOUT

		PLATING	D	C	B	A	NO OF POS	ASSEMBLY PART NUMBER
9 OBSOLETE	7		2.620	2.540	2.400	24	25	7-103414-3
	7		2.520	2.440	2.300	23	24	7-103414-2
9 OBSOLETE	7		2.420	2.340	2.200	22	23	7-103414-1
	7		2.320	2.240	2.100	21	22	7-103414-0
9 OBSOLETE	7		2.220	2.140	2.000	20	21	6-103414-9
	7		2.120	2.040	1.900	19	20	6-103414-8
9 OBSOLETE	7		2.020	1.940	1.800	18	19	6-103414-7
	7		1.920	1.840	1.700	17	18	6-103414-6
9 OBSOLETE	7		1.820	1.740	1.600	16	17	6-103414-5
	7		1.720	1.640	1.500	15	16	6-103414-4
9 OBSOLETE	7		1.620	1.540	1.400	14	15	6-103414-3
	7		1.520	1.440	1.300	13	14	6-103414-2
	7		1.420	1.340	1.200	12	13	6-103414-1
	7		1.320	1.240	1.100	11	12	6-103414-0
	7		1.220	1.140	1.000	10	11	5-103414-9
	7		1.120	1.040	.900	9	10	5-103414-8
	7		1.020	.940	.800	8	9	5-103414-7
	7		.920	.840	.700	7	8	5-103414-6
	7		.820	.740	.600	6	7	5-103414-5
	7		.720	.640	.500	5	6	5-103414-4
	7		.620	.540	.400	4	5	5-103414-3
	7		.520	.440	.300	3	4	5-103414-2
	7		.420	.340	.200	2	3	5-103414-1
OBSOLETE	4		3.720	3.640	3.500	35	36	3-103414-4
OBSOLETE	4		3.620	3.540	3.400	34	35	3-103414-3
OBSOLETE	4		3.520	3.440	3.300	33	34	3-103414-2
OBSOLETE	4		3.420	3.340	3.200	32	33	3-103414-1
OBSOLETE	4		3.320	3.240	3.100	31	32	3-103414-0
OBSOLETE	4		3.220	3.140	3.000	30	31	2-103414-9
OBSOLETE	4		3.120	3.040	2.900	29	30	2-103414-8
OBSOLETE	4		3.020	2.940	2.800	28	29	2-103414-7
OBSOLETE	4		2.920	2.840	2.700	27	28	2-103414-6
OBSOLETE	4		2.820	2.740	2.600	26	27	2-103414-5
OBSOLETE	4		2.720	2.640	2.500	25	26	2-103414-4
9 OBSOLETE	4		2.620	2.540	2.400	24	25	2-103414-3
	4		2.520	2.440	2.300	23	24	2-103414-2
9 OBSOLETE	4		2.420	2.340	2.200	22	23	2-103414-1
	4		2.320	2.240	2.100	21	22	2-103414-0
9 OBSOLETE	4		2.220	2.140	2.000	20	21	1-103414-9
	4		2.120	2.040	1.900	19	20	1-103414-8
9 OBSOLETE	4		2.020	1.940	1.800	18	19	1-103414-7
	4		1.920	1.840	1.700	17	18	1-103414-6
9 OBSOLETE	4		1.820	1.740	1.600	16	17	1-103414-5
	4		1.720	1.640	1.500	15	16	1-103414-4
	4		1.620	1.540	1.400	14	15	1-103414-3
	4		1.520	1.440	1.300	13	14	1-103414-2
9 SUPERSEDED BY 6-103414-1	4		1.420	1.340	1.200	12	13	1-103414-1
	4		1.320	1.240	1.100	11	12	1-103414-0
	4		1.220	1.140	1.000	10	11	103414-9
	4		1.120	1.040	.900	9	10	103414-8
	4		1.020	.940	.800	8	9	103414-7
	4		.920	.840	.700	7	8	103414-6
	4		.820	.740	.600	6	7	103414-5
	4		.720	.640	.500	5	6	103414-4
	4		.620	.540	.400	4	5	103414-3
	4		.520	.440	.300	3	4	103414-2
	4		.420	.340	.200	2	3	103414-1

THIS DRAWING IS A CONTROLLED DOCUMENT.

DIMENSIONS: INCHES

TOLERANCES UNLESS OTHERWISE SPECIFIED:
0 PLC ± -
1 PLC ± -
2 PLC ± -
3 PLC ± .005
4 PLC ± -
ANGLES ± -

MATERIAL 8

FINISH SEE TABLE

DWN R BROWN 28JAN05
CHK J GESFORD 28JAN05
APVD J GESFORD 28JAN05

PRODUCT SPEC —
APPLICATION SPEC —
WEIGHT —

Tyco Electronics
Tyco Electronics Corporation
Harrisburg, Pa 17105-3608

NAME ASSEMBLY, MOD II, HEADER, SINGLE ROW .100 C/L, (4) SIDED SHROUD

SIZE	CAGE CODE	DRAWING NO	RESTRICTED TO
A1	00779	C-103414	—

CUSTOMER DRAWING | SCALE 4:1 | SHEET 1 OF 1 | REV P1