LPC47N217

64-Pin Super I/O with LPC Interface

Product Features

- 3.3 Volt Operation (5V tolerant)
- Programmable Wakeup Event Interface (IO_PME# Pin)
- SMI Support (IO_SMI# Pin)
- GPIOs (14)
- Two IRQ Input Pins
- XNOR Chain
- PC99a, PC2001
- ACPI 2.0 Compliant
- 64-pin STQFP RoHS Compliant Package
- Intelligent Auto Power Management
- Serial Ports
  - One Full Function Serial Port
  - High Speed 16C550A Compatible UART with Send/Receive 16-Byte FIFO
  - Supports 230k and 460k Baud
  - Programmable Baud Rate Generator
  - Modem Control Circuitry
- Infrared Communications Controller
  - IrDA v1.2 (4Mbps), HPSIR, ASKIR, Consumer IR Support
  - 1 IR Port
  - 96 Base I/O Address, 15 IRQ Options and 3 DMA Options
- Multi-Mode Parallel Port with ChiProtect™
  - Standard Mode IBM PC/XT, PC/AT, and PS/2 Compatible Bidirectional Parallel Port
  - Enhanced Parallel Port (EPP) Compatible - EPP 1.7 and EPP 1.9 (IEEE 1284 Compliant)
  - IEEE 1284 Compliant Enhanced Capabilities Port (ECP)
  - ChiProtect Circuitry for Protection Against Damage Due to Printer Power-On
  - 192 Base I/O Address, 15 IRQ and 3 DMA Options
- LPC Bus Host Interface
  - Supports LPC Bus frequencies of 19.2 MHz to 33 MHz
  - Multiplexed Command, Address and Data Bus
  - 8-Bit I/O Transfers
  - 8-Bit DMA Transfers
  - 16-Bit Address Qualification
  - Serial IRQ Interface Compatible with Serialized IRQ Support for PCI Systems
  - PCI CLKRUN# Support
  - Power Management Event (IO_PME#) Interface Pin

Description

The Microchip LPC47N217 is a 3.3V PC 99, PC2001, and ACPI 2.0 compliant Super I/O Controller. The LPC47N217 implements the LPC interface, a pin reduced ISA interface which provides the same or better performance as the ISA/X-bus with a substantial savings in pins used. The part also includes 14 GPIO pins.

The LPC47N217 incorporates a 16C550A compatible UART and one Multi-Mode parallel port with ChiProtect circuitry plus EPP and ECP support. This device also offers a full 16-bit internally decoded address bus, a Serial IRQ interface with PCI CLKRUN# support, relocatable configuration ports, and three DMA channel options.

The on-chip UART is compatible with the 16C550A. There is a dedicated Serial Infrared interface UART, which complies with IrDA v1.2 (Fast IR), HPSIR, and ASKIR formats (used by Sharp and other PDAs), as well as Consumer IR.

The parallel port is compatible with IBM PC/AT architectures, as well as IEEE 1284 EPP and ECP. The parallel port ChiProtect circuitry prevents damage caused by an attached powered printer when the LPC47N217 is not powered.

The LPC47N217 features Software Configurable Logic (SCL) for ease of use. SCL allows programmable system configuration of key functions such as the parallel port and UART.

The LPC47N217 supports the ISA Plug-and-Play Standard register set (Version 1.0a) and provides the recommended functionality to support Windows operating systems, PC99, and PC2001. The I/O Address, DMA Channel, and Hardware IRQ of each device in the LPC47N217 may be reprogrammed through the internal configuration registers. There are multiple I/O address location options, a Serialized IRQ interface, and three DMA channels.

© 2006 - 2014 Microchip Technology Inc.

TO OUR VALUED CUSTOMERS

It is our intention to provide our valued customers with the best documentation possible to ensure successful use of your Microchip products. To this end, we will continue to improve our publications to better suit your needs. Our publications will be refined and enhanced as new volumes and updates are introduced.

If you have any questions or comments regarding this publication, please contact the Marketing Communications Department via E-mail at **docerrors@microchip.com**. We welcome your feedback.

Most Current Data Sheet

To obtain the most up-to-date version of this data sheet, please register at our Worldwide Web site at:

http://www.microchip.com

You can determine the version of a data sheet by examining its literature number found on the bottom outside corner of any page. The last character of the literature number is the version number, (e.g., DS30000000A is version A of document DS30000000).

Errata

An errata sheet, describing minor operational differences from the data sheet and recommended workarounds, may exist for current devices. As device/documentation issues become known to us, we will publish an errata sheet. The errata will specify the revision of silicon and revision of document to which it applies.

To determine if an errata sheet exists for a particular device, please check with one of the following:

- Microchip's Worldwide Web site; http://www.microchip.com
- Your local Microchip sales office (see last page)

When contacting a sales office, please specify which device, revision of silicon and data sheet (include -literature number) you are using.

Customer Notification System

Register on our web site at **www.microchip.com** to receive the most current information on all of our products.

© 2006 - 2014 Microchip Technology Inc.

BLOCK DIAGRAM

FIGURE 1: LPC47N217 BLOCK DIAGRAM

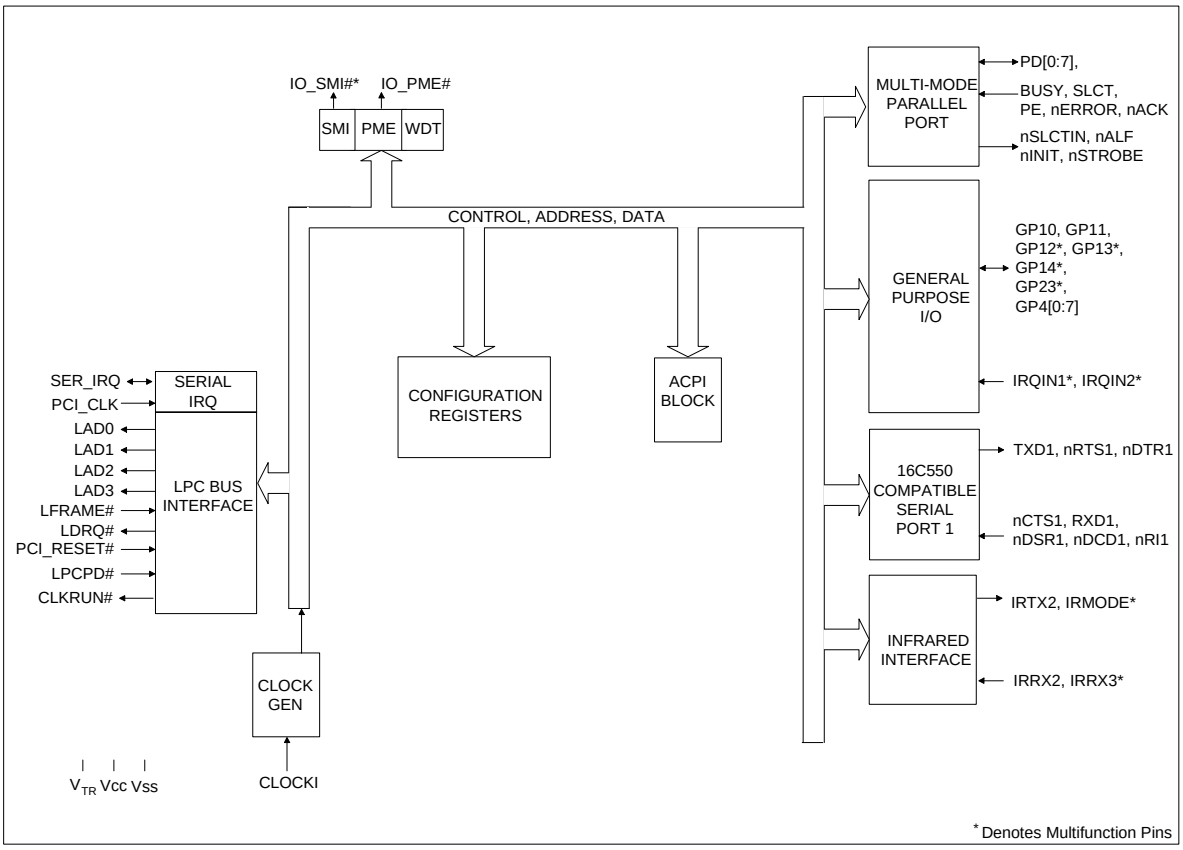

PACKAGE OUTLINE

Note: For the most current package drawings, see the Microchip Packaging Specification at http://www.microchip.com/packaging.

FIGURE 2: 64-PIN STQFP PACKAGE, 7 X 7 X 1.4 BODY, 2 MM FOOTPRINT

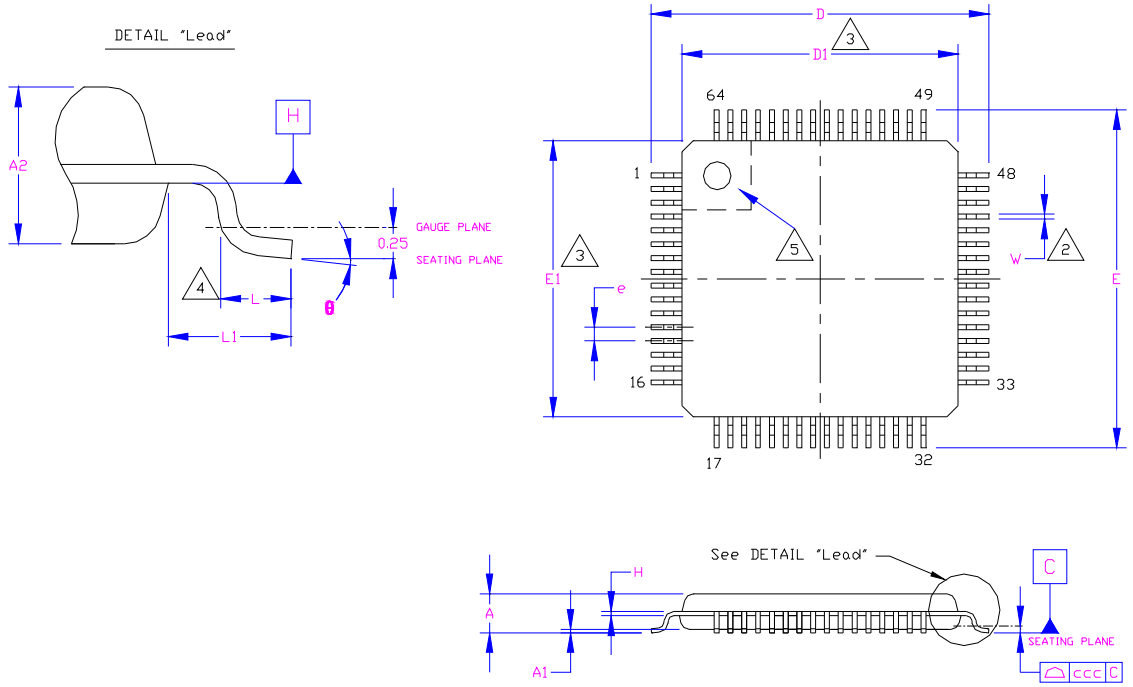

	Min	Nominal	Max	Remarks
A	~	~	1.60	Overall Package Height
A1	0.05	~	0.15	Standoff
A2	1.35	1.40	1.45	Body Thickness
D	8.80	9.00	9.20	X Span
D1	6.80	7.00	7.20	X body Size
E	8.80	9.00	9.20	Y Span
E1	6.80	7.00	7.20	Y body Size
H	0.09	~	0.20	Lead Frame Thickness
L	0.45	0.60	0.75	Lead Foot Length
L1	~	1.00 REF.	~	Lead Length
e	0.40 Basic			Lead Pitch
θ	0°	~	7°	Lead Foot Angle
W	0.13	0.18	0.23	Lead Width
ccc	~	~	0.08	Coplanarity

Note 1: Controlling Unit: millimeter.

2: Tolerance on the true position of the leads is ± 0.035 mm maximum.

3: Package body dimensions D1 and E1 do not include the mold protrusion.
Maximum mold protrusion is 0.25 mm per side. D1 and E1 dimensions determined at datum plane H.

4: Dimension for foot length L measured at the gauge plane 0.25 mm above the seating plane.

5: Details of pin 1 identifier are optional but must be located within the zone indicated.

© 2006 - 2014 Microchip Technology Inc.

APPENDIX A: PRODUCT BRIEF REVISION HISTORY

TABLE A-1: REVISION HISTORY

Revision	Section/Figure/Entry	Correction
DS00001810A (08-07-14)	Replaces previous SMSC version Rev.0.2 (09-21-06)	

THE MICROCHIP WEB SITE

Microchip provides online support via our WWW site at www.microchip.com. This web site is used as a means to make files and information easily available to customers. Accessible by using your favorite Internet browser, the web site contains the following information:

- **Product Support** – Data sheets and errata, application notes and sample programs, design resources, user's guides and hardware support documents, latest software releases and archived software
- **General Technical Support** – Frequently Asked Questions (FAQ), technical support requests, online discussion groups, Microchip consultant program member listing
- **Business of Microchip** – Product selector and ordering guides, latest Microchip press releases, listing of seminars and events, listings of Microchip sales offices, distributors and factory representatives

CUSTOMER CHANGE NOTIFICATION SERVICE

Microchip's customer notification service helps keep customers current on Microchip products. Subscribers will receive e-mail notification whenever there are changes, updates, revisions or errata related to a specified product family or development tool of interest.

To register, access the Microchip web site at www.microchip.com. Under "Support", click on "Customer Change Notification" and follow the registration instructions.

CUSTOMER SUPPORT

Users of Microchip products can receive assistance through several channels:

- Distributor or Representative
- Local Sales Office
- Field Application Engineer (FAE)
- Technical Support

Customers should contact their distributor, representative or field application engineer (FAE) for support. Local sales offices are also available to help customers. A listing of sales offices and locations is included in the back of this document.

Technical support is available through the web site at: http://www.microchip.com/support

© 2006 - 2014 Microchip Technology Inc.

PRODUCT IDENTIFICATION SYSTEM

To order or obtain information, e.g., on pricing or delivery, refer to the factory or the listed sales office.

PART NO.[1]	-	XXX[2]	-	[X][3]
Device		Package		Tape and Reel Option

Device:	LPC47N217 [1]		
Package:	JV	=	64-pin STQFP [2]
Tape and Reel Option:	Blank	=	Tray packaging
	TR	=	Tape and Reel [3]

Example:

LPC47N217-JV = 64-pin STQFP

Note 1: These products meet the halogen maximum concentration values per IEC61249-2-21.

Note 2: All package options are RoHS compliant. For RoHS compliance and environmental information, please visit http://www.microchip.com/pagehandler/en-us/aboutus/ehs.html .

Note 3: Tape and Reel identifier only appears in the catalog part number description. This identifier is used for ordering purposes and is not printed on the device package. Check with your Microchip Sales Office for package availability with the Tape and Reel option.

Note the following details of the code protection feature on Microchip devices:

- Microchip products meet the specification contained in their particular Microchip Data Sheet.
- Microchip believes that its family of products is one of the most secure families of its kind on the market today, when used in the intended manner and under normal conditions.
- There are dishonest and possibly illegal methods used to breach the code protection feature. All of these methods, to our knowledge, require using the Microchip products in a manner outside the operating specifications contained in Microchip's Data Sheets. Most likely, the person doing so is engaged in theft of intellectual property.
- Microchip is willing to work with the customer who is concerned about the integrity of their code.
- Neither Microchip nor any other semiconductor manufacturer can guarantee the security of their code. Code protection does not mean that we are guaranteeing the product as "unbreakable."

Code protection is constantly evolving. We at Microchip are committed to continuously improving the code protection features of our products. Attempts to break Microchip's code protection feature may be a violation of the Digital Millennium Copyright Act. If such acts allow unauthorized access to your software or other copyrighted work, you may have a right to sue for relief under that Act.

Information contained in this publication regarding device applications and the like is provided only for your convenience and may be superseded by updates. It is your responsibility to ensure that your application meets with your specifications. MICROCHIP MAKES NO REPRESENTATIONS OR WARRANTIES OF ANY KIND WHETHER EXPRESS OR IMPLIED, WRITTEN OR ORAL, STATUTORY OR OTHERWISE, RELATED TO THE INFORMATION, INCLUDING BUT NOT LIMITED TO ITS CONDITION, QUALITY, PERFORMANCE, MERCHANTABILITY OR FITNESS FOR PURPOSE**.** Microchip disclaims all liability arising from this information and its use. Use of Microchip devices in life support and/or safety applications is entirely at the buyer's risk, and the buyer agrees to defend, indemnify and hold harmless Microchip from any and all damages, claims, suits, or expenses resulting from such use. No licenses are conveyed, implicitly or otherwise, under any Microchip intellectual property rights.

Trademarks

The Microchip name and logo, the Microchip logo, dsPIC, FlashFlex, flexPWR, JukeBlox, KEELOQ, KEELOQ logo, Kleer, LANCheck, MediaLB, MOST, MOST logo, MPLAB, OptoLyzer, PIC, PICSTART, PIC^{32} logo, RightTouch, SpyNIC, SST, SST Logo, SuperFlash and UNI/O are registered trademarks of Microchip Technology Incorporated in the U.S.A. and other countries.

The Embedded Control Solutions Company and mTouch are registered trademarks of Microchip Technology Incorporated in the U.S.A.

Analog-for-the-Digital Age, BodyCom, chipKIT, chipKIT logo, CodeGuard, dsPICDEM, dsPICDEM.net, ECAN, In-Circuit Serial Programming, ICSP, Inter-Chip Connectivity, KleerNet, KleerNet logo, MiWi, MPASM, MPF, MPLAB Certified logo, MPLIB, MPLINK, MultiTRAK, NetDetach, Omniscient Code Generation, PICDEM, PICDEM.net, PICkit, PICtail, RightTouch logo, REAL ICE, SQI, Serial Quad I/O, Total Endurance, TSHARC, USBCheck, VariSense, ViewSpan, WiperLock, Wireless DNA, and ZENA are trademarks of Microchip Technology Incorporated in the U.S.A. and other countries.

SQTP is a service mark of Microchip Technology Incorporated in the U.S.A.

Silicon Storage Technology is a registered trademark of Microchip Technology Inc. in other countries.

GestIC is a registered trademarks of Microchip Technology Germany II GmbH & Co. KG, a subsidiary of Microchip Technology Inc., in other countries.

All other trademarks mentioned herein are property of their respective companies.

© 2006 - 2014, Microchip Technology Incorporated, Printed in the U.S.A., All Rights Reserved.

ISBN: 9781632765093

QUALITY MANAGEMENT SYSTEM
CERTIFIED BY DNV
= ISO/TS 16949 =

Microchip received ISO/TS-16949:2009 certification for its worldwide headquarters, design and wafer fabrication facilities in Chandler and Tempe, Arizona; Gresham, Oregon and design centers in California and India. The Company's quality system processes and procedures are for its PIC® MCUs and dsPIC® DSCs, KEELOQ® code hopping devices, Serial EEPROMs, microperipherals, nonvolatile memory and analog products. In addition, Microchip's quality system for the design and manufacture of development systems is ISO 9001:2000 certified.

Worldwide Sales and Service

AMERICAS

Corporate Office
2355 West Chandler Blvd.
Chandler, AZ 85224-6199
Tel: 480-792-7200
Fax: 480-792-7277
Technical Support:
http://www.microchip.com/support
Web Address:
www.microchip.com

Atlanta
Duluth, GA
Tel: 678-957-9614
Fax: 678-957-1455

Austin, TX
Tel: 512-257-3370

Boston
Westborough, MA
Tel: 774-760-0087
Fax: 774-760-0088

Chicago
Itasca, IL
Tel: 630-285-0071
Fax: 630-285-0075

Cleveland
Independence, OH
Tel: 216-447-0464
Fax: 216-447-0643

Dallas
Addison, TX
Tel: 972-818-7423
Fax: 972-818-2924

Detroit
Novi, MI
Tel: 248-848-4000

Houston, TX
Tel: 281-894-5983

Indianapolis
Noblesville, IN
Tel: 317-773-8323
Fax: 317-773-5453

Los Angeles
Mission Viejo, CA
Tel: 949-462-9523
Fax: 949-462-9608

New York, NY
Tel: 631-435-6000

San Jose, CA
Tel: 408-735-9110

Canada - Toronto
Tel: 905-673-0699
Fax: 905-673-6509

ASIA/PACIFIC

Asia Pacific Office
Suites 3707-14, 37th Floor
Tower 6, The Gateway
Harbour City, Kowloon
Hong Kong
Tel: 852-2943-5100
Fax: 852-2401-3431

Australia - Sydney
Tel: 61-2-9868-6733
Fax: 61-2-9868-6755

China - Beijing
Tel: 86-10-8569-7000
Fax: 86-10-8528-2104

China - Chengdu
Tel: 86-28-8665-5511
Fax: 86-28-8665-7889

China - Chongqing
Tel: 86-23-8980-9588
Fax: 86-23-8980-9500

China - Hangzhou
Tel: 86-571-8792-8115
Fax: 86-571-8792-8116

China - Hong Kong SAR
Tel: 852-2943-5100
Fax: 852-2401-3431

China - Nanjing
Tel: 86-25-8473-2460
Fax: 86-25-8473-2470

China - Qingdao
Tel: 86-532-8502-7355
Fax: 86-532-8502-7205

China - Shanghai
Tel: 86-21-5407-5533
Fax: 86-21-5407-5066

China - Shenyang
Tel: 86-24-2334-2829
Fax: 86-24-2334-2393

China - Shenzhen
Tel: 86-755-8864-2200
Fax: 86-755-8203-1760

China - Wuhan
Tel: 86-27-5980-5300
Fax: 86-27-5980-5118

China - Xian
Tel: 86-29-8833-7252
Fax: 86-29-8833-7256

China - Xiamen
Tel: 86-592-2388138
Fax: 86-592-2388130

China - Zhuhai
Tel: 86-756-3210040
Fax: 86-756-3210049

ASIA/PACIFIC

India - Bangalore
Tel: 91-80-3090-4444
Fax: 91-80-3090-4123

India - New Delhi
Tel: 91-11-4160-8631
Fax: 91-11-4160-8632

India - Pune
Tel: 91-20-3019-1500

Japan - Osaka
Tel: 81-6-6152-7160
Fax: 81-6-6152-9310

Japan - Tokyo
Tel: 81-3-6880- 3770
Fax: 81-3-6880-3771

Korea - Daegu
Tel: 82-53-744-4301
Fax: 82-53-744-4302

Korea - Seoul
Tel: 82-2-554-7200
Fax: 82-2-558-5932 or
82-2-558-5934

Malaysia - Kuala Lumpur
Tel: 60-3-6201-9857
Fax: 60-3-6201-9859

Malaysia - Penang
Tel: 60-4-227-8870
Fax: 60-4-227-4068

Philippines - Manila
Tel: 63-2-634-9065
Fax: 63-2-634-9069

Singapore
Tel: 65-6334-8870
Fax: 65-6334-8850

Taiwan - Hsin Chu
Tel: 886-3-5778-366
Fax: 886-3-5770-955

Taiwan - Kaohsiung
Tel: 886-7-213-7830

Taiwan - Taipei
Tel: 886-2-2508-8600
Fax: 886-2-2508-0102

Thailand - Bangkok
Tel: 66-2-694-1351
Fax: 66-2-694-1350

EUROPE

Austria - Wels
Tel: 43-7242-2244-39
Fax: 43-7242-2244-393

Denmark - Copenhagen
Tel: 45-4450-2828
Fax: 45-4485-2829

France - Paris
Tel: 33-1-69-53-63-20
Fax: 33-1-69-30-90-79

Germany - Dusseldorf
Tel: 49-2129-3766400

Germany - Munich
Tel: 49-89-627-144-0
Fax: 49-89-627-144-44

Germany - Pforzheim
Tel: 49-7231-424750

Italy - Milan
Tel: 39-0331-742611
Fax: 39-0331-466781

Italy - Venice
Tel: 39-049-7625286

Netherlands - Drunen
Tel: 31-416-690399
Fax: 31-416-690340

Poland - Warsaw
Tel: 48-22-3325737

Spain - Madrid
Tel: 34-91-708-08-90
Fax: 34-91-708-08-91

Sweden - Stockholm
Tel: 46-8-5090-4654

UK - Wokingham
Tel: 44-118-921-5800
Fax: 44-118-921-5820

03/25/14

© 2006 - 2014 Microchip Technology Inc.