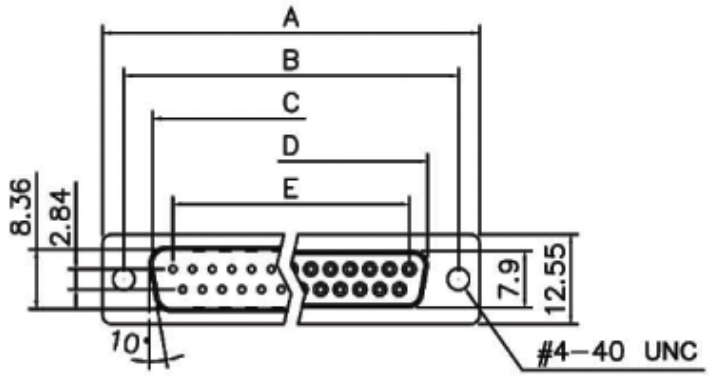

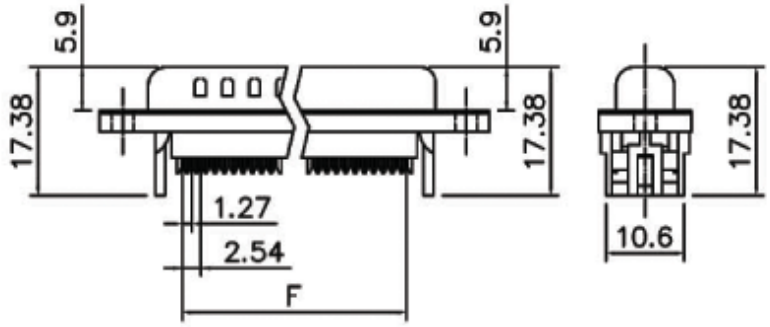

With Insulator Support

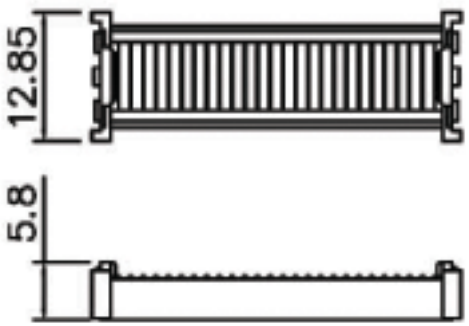

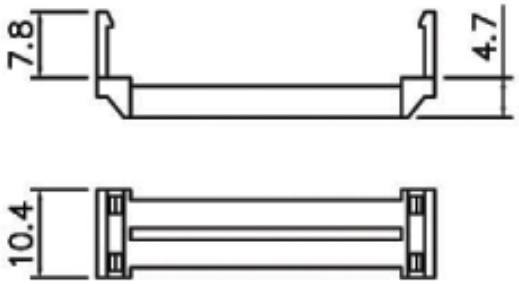

Strain Relief

A-DXFXXLPIIIZ-UNC-R

1. S - MALE
   F - FEMALE
2. No of contacts
   09/15/25/37

Positions	A	B	C	D	E	F
9	30.81	24.99	16.92	16.33	11.08	10.16
15	39.14	33.32	25.50	24.66	19.39	17.78
25	53.04	47.04	38.96	38.38	33.24	30.48
37	69.32	63.50	55.42	54.84	49.86	45.72

RoHS Complaint

Scale	1:1						Name
TOLERANCE					Drawn	11.22.11	Chappell
X.X	±0.40				Approved		
X.XX	±0.25						
X.XXX	±0.15						
Angle	±3°						
			Modification	Date	Name		

ASSMANN WSW components

Item No.

A-DxFxxLPIIIZ-UNC-R

Title D-Sub connectors for flat ribbon cable, Low profile version with UNC thread

Drawing No.

rev00

Replace

Sheet