THIS DRAWING IS UNPUBLISHED. RELEASED FOR PUBLICATION -,- .
© COPYRIGHT - By - ALL RIGHTS RESERVED.

LOC	DIST
AF	50

REVISIONS

P	LTR	DESCRIPTION	DATE	DWN	APVD
	AA	REVISED PER ECR-12-013445	26OCT12	KH	PD

1 CONTINUOUS STRIP ON REELS.

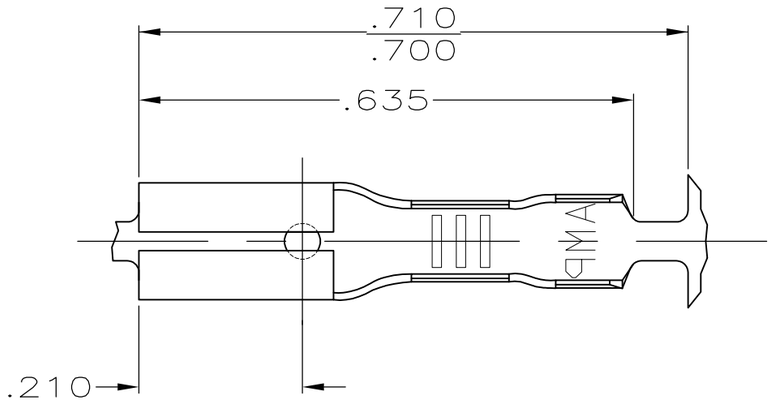

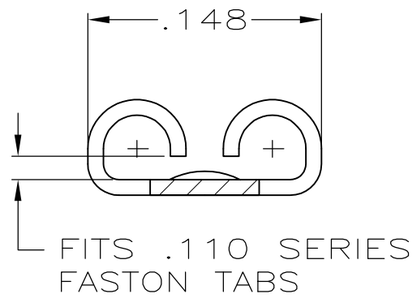

VIEW A-A
SCALE 10:1

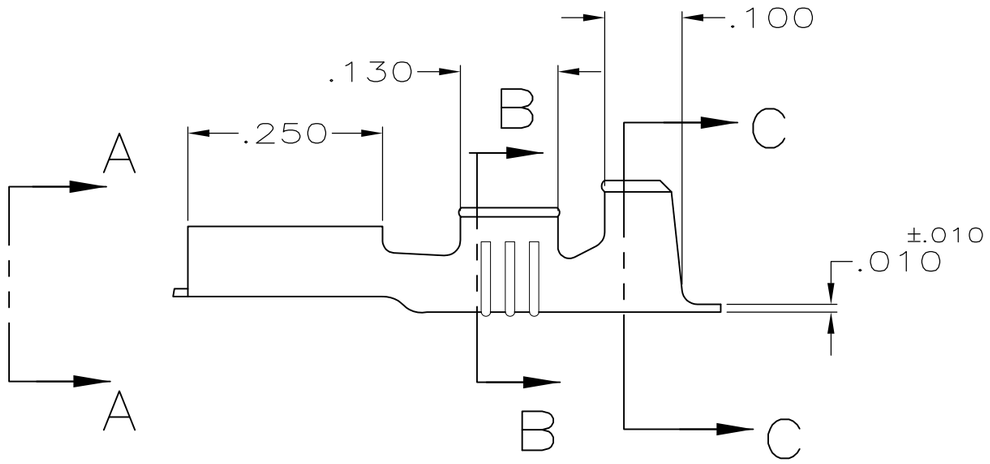

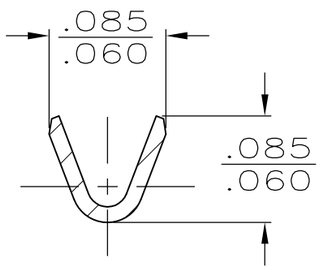

SECTION B-B
SCALE 10:1

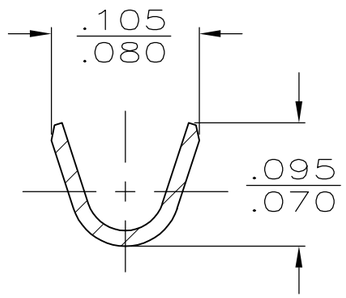

SECTION C-C
SCALE 10:1

OBSOLETE	~~GOLD~~	.040-.060	#24-#22	.020	~~42067-2~~
	PRE-TIN				42067-1
	FINISH	INSUL RANGE	WIRE SIZE	MATING TAB THK ±.001	PART NO

THIS DRAWING IS A CONTROLLED DOCUMENT.

DIMENSIONS: INCHES

TOLERANCES UNLESS OTHERWISE SPECIFIED:

0 PLC	± -
1 PLC	± -
2 PLC	± -
3 PLC	± .015
4 PLC	± -
ANGLES	± -

MATERIAL: BRASS

FINISH: SEE TABLE

DWN JR RUTH 3/27/91
CHK MS FEHER 3/27/91
APVD C MEYERS 3/27/91
PRODUCT SPEC —
APPLICATION SPEC —
WEIGHT —

TE Connectivity

NAME: RECEPTACLE, FASTON, .110 SERIES

SIZE	CAGE CODE	DRAWING NO	RESTRICTED TO
A3	00779	C-42067	—

CUSTOMER DRAWING

SCALE	SHEET	REV
5:1	1 OF 1	AA