THIS DRAWING IS UNPUBLISHED. RELEASED FOR PUBLICATION 2006
© COPYRIGHT 2006 BY TYCO ELECTRONICS CORPORATION. ALL RIGHTS RESERVED.

LOC	DIST
A1	-

REVISIONS

P	LTR	DESCRIPTION	DATE	DWN	APVD
	B3	new pro/E drawing ECR-08-022186	27JAN2009	SR	AR
	B4	ECR-10-008205	29APR2010	VG	AR

PN 0-1 AS SHOWN

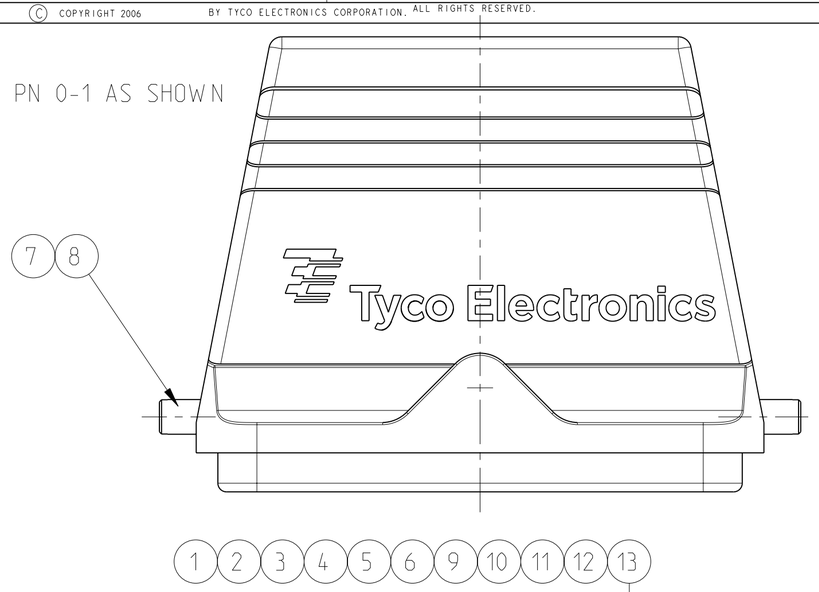

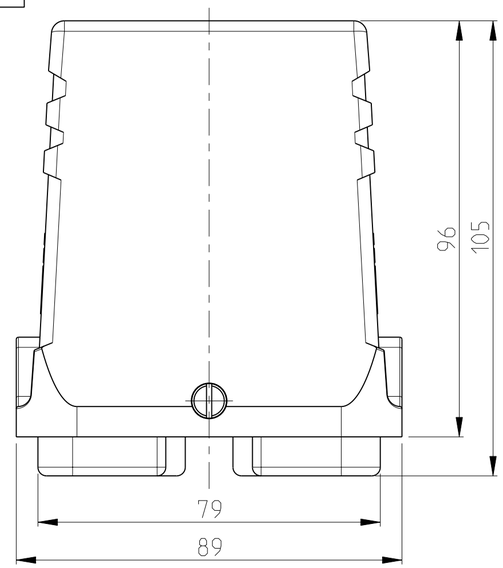

PN 1-2

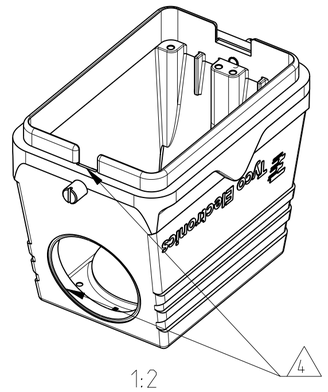

1:2

PN 0-7 AS SHOWN

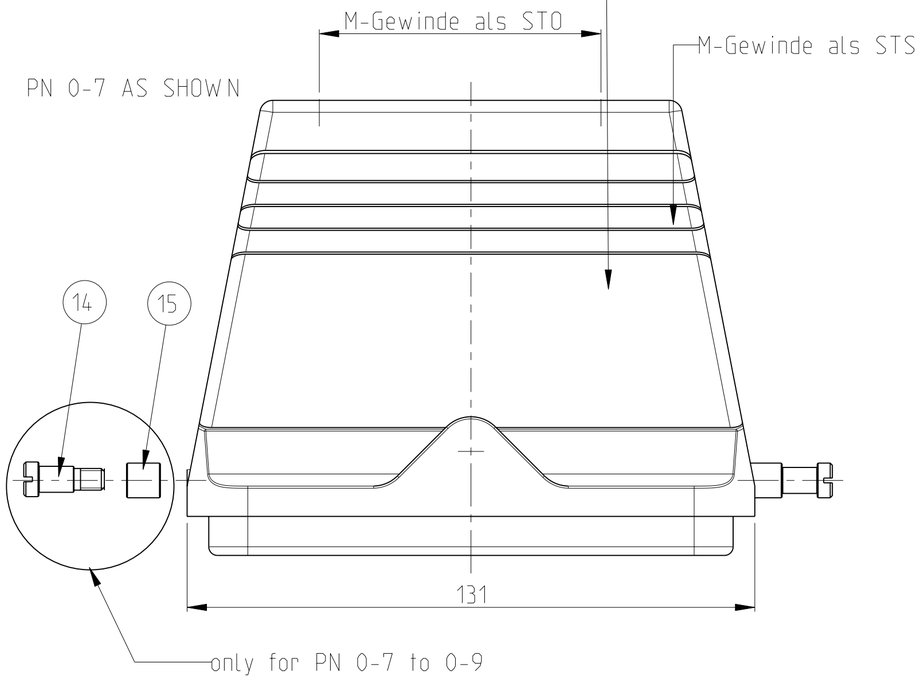

1-2	1-1	1-0	0-9	0-8	0-7	0-6	0-5	0-4	0-3	0-2	0-1	DESCRIPTION	MATERIAL	SURFACE	COLOR	ITEM	NOTES
1												HOOD-HB-K		ALUMINIUM OXID	BLACK	16	SMALL CODING NUT
			2	2	2							SLIDE SPOOL - STÄUBLI	BRASS	BLANC		15	
			2	2	2							CLIP BOLT	STAINLESS STEEL	BLANC		14	
	1											HOOD-HB	ALUMINIUM		GREY	13	
		1										HOOD-HB	ALUMINIUM		GREY	12	WITHOUT HTS-LOGO
			1									HOOD-HB	ALUMINIUM		GREY	11	WITHOUT HTS-LOGO
				1								HOOD-HB	ALUMINIUM		GREY	10	WITHOUT HTS-LOGO
					1							HOOD-HB	ALUMINIUM		GREY	9	WITHOUT HTS-LOGO
2						2		2	2			CLIP BOLT	STAINLESS STEEL	BLANC		8	
	2	2					2			2	2	CLIP BOLT	STEEL	ZINK PLATED	BLUE	7	
						1						HOOD-HB-K	ALUMINIUM	ALUMINIUM OXID	BLACK	6	
							1					HOOD-HB	ALUMINIUM		GREY	5	
								1				HOOD-HB-K	ALUMINIUM	ALUMINIUM OXID	BLACK	4	
									1			HOOD-HB-K	ALUMINIUM	ALUMINIUM OXID	BLACK	3	
										1		HOOD-HB	ALUMINIUM		GREY	2	
											1	HOOD-HB	ALUMINIUM		GREY	1	
											HB.48.STO-GR.1.M50.G						
										HB.48.STS-GR.1.M50.G							
									HB-K.48.STO-GR.1.M63.G								
								HB-K.48.STS-GR.1.M50.G									
							HB.48.STS-GR.1.M40.G										
						HB-K.48.STO-GR.1.M50.G											
					HB.48.STO-GR.1.M50.G												
				HB.48.STS-GR.1.M50.G													
			HB.48.ST-GR														
		HB.48.STO-GR.1.M40.G															
	HB.48.STO-GR.2.M25.G																
HB-K.48.STS-GR.1.M50.G-Code																	

NOTES

1 PART SHALL BE FREE AND CLEAN OF BURRS AND OTHER FOREIGN MATERIAL

2 PACKAGING: QUANTITY 3 PIECES

3 VARNISHING INSIDE HOUSING NOT REQUIRED

4 GLAND FITTING THREAD IS ORIENTATED TO THE SMALLER POLARIZATION NOTCH

THIS DRAWING IS A CONTROLLED DOCUMENT FOR TYCO ELECTRONICS CORPORATION IT IS SUBJECT TO CHANGE AND THE CONTROLLING ENGINEERING ORGANIZATION SHOULD BE CONTACTED FOR THE LATEST REVISION.

DIMENSIONS: mm

TOLERANCES UNLESS OTHERWISE SPECIFIED:
0 PLC ±-
1 PLC ±-
2 PLC ±-
3 PLC ±-
4 PLC ±-
ANGLES ±1°

MATERIAL -

FINISH -

DWN 27JAN2009 R.SCHNEIDER
CHK 27JAN2009 T.SCHNURPFEIL
APVD -
PRODUCT SPEC -
APPLICATION SPEC -
WEIGHT -

Tyco Electronics
tyco Electronics AMP GmbH
53757 Sankt Augustin (Germany)

NAME
HOOD
HB.48.STO-GR.1.M50.G
-

SIZE	CAGE CODE	DRAWING NO	RESTRICTED TO
A2	00779	C-1106482	-

CUSTOMER DRAWING

SCALE 1:1 SHEET 1 OF 1 REV B4

AMP 1471-9 REV 31MAR2000

Pro/ENGINEER DRAWING