THIS DRAWING IS UNPUBLISHED. RELEASED FOR PUBLICATION -,- .
© COPYRIGHT - BY TYCO ELECTRONICS CORPORATION. ALL RIGHTS RESERVED.

LOC	DIST
AD	00

REVISIONS

P	LTR	DESCRIPTION	DATE	DWN	APVD
	B	ECO-07-000241	22FEB2007	RB	MS

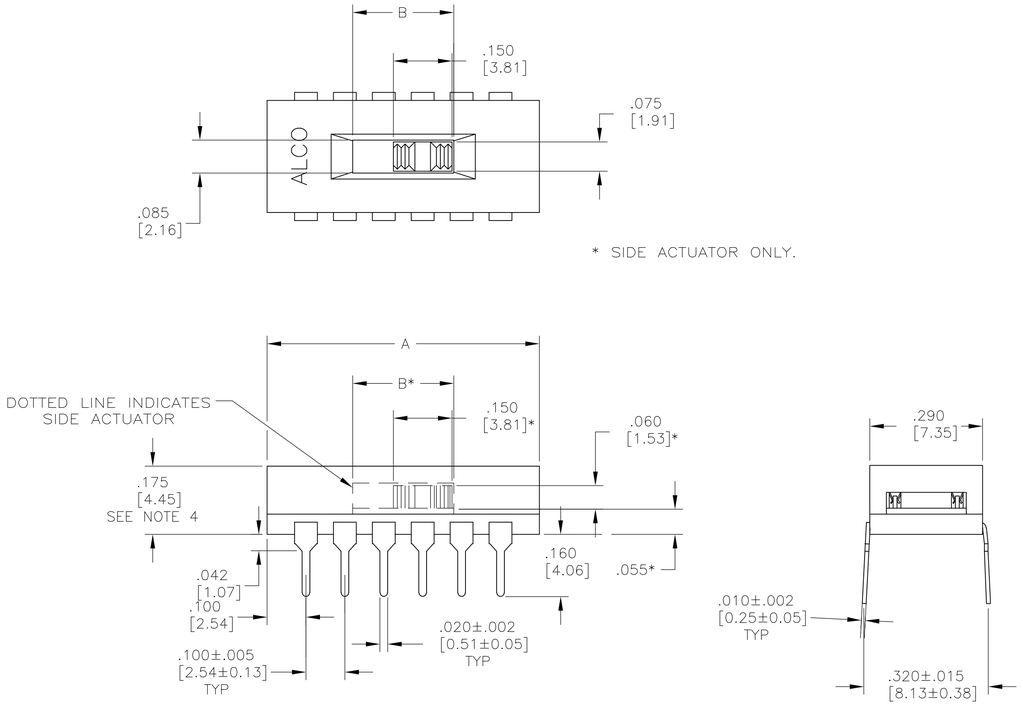

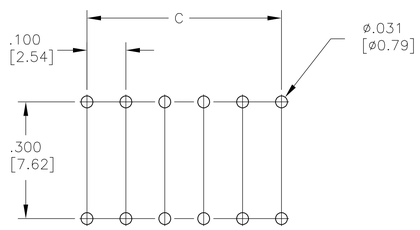

PRINTED CIRCUIT BOARD
HOLE PATTERN

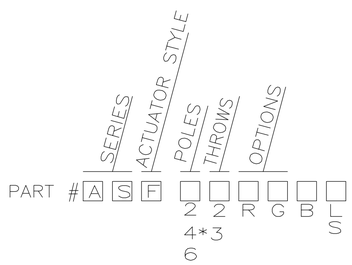

E = EXTENDED ACTUATOR
F = FLUSH ACTUATOR
*3 = THROW AVAILABLE
R = SIDE ACTUATOR
G = GOLD CONTACTS (BLANK SILVER)
B = BLACK ACTUATOR
L = GULL WING STYLE SURFACE MOUNT
S = J-LEAD STYLE SURFACE MOUNT
TR = TAPE AND REEL PACKAGING

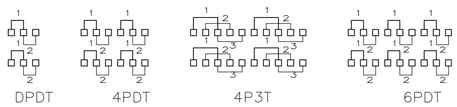

CIRCUIT DIAGRAMS

NOTES	PACKAGING	Dim D	Dim C	Dim B	Dim A	FINISH (ABCD)	MTG STYLE	ACTUATION	FUNCTION	ALCO P/N	TYCO P/N
5	T & R	0.105 [2.67]	0.200 [5.08]	0.260 [6.60]	0.400 [10.16]	SILVER	SMT	TOP	DPDT	ASF7126004	8-1825011-1
	T & R	0.230 [5.82]	0.800 [20.32]	0.260 [6.60]	1.000 [25.40]	SILVER	SMT	SIDE	6PDT	ASF62RSTR04	8-1825011-0
	TUBE	0.230 [5.82]	0.800 [20.32]	0.260 [6.60]	1.000 [25.40]	SILVER	SMT	SIDE	6PDT	ASF62RS04	7-1825011-9
	T & R	0.230 [5.82]	0.800 [20.32]	0.260 [6.60]	1.000 [25.40]	GOLD	SMT	SIDE	6PDT	ASF62RGSTR04	7-1825011-8
	TUBE	0.230 [5.82]	0.800 [20.32]	0.260 [6.60]	1.000 [25.40]	GOLD	SMT	SIDE	6PDT	ASF62RGS04	7-1825011-7
	T & R	0.230 [5.82]	0.800 [20.32]	0.260 [6.60]	1.000 [25.40]	SILVER	SMT	SIDE	6PDT	ASF62RLTR04	7-1825011-6
	TUBE	0.230 [5.82]	0.800 [20.32]	0.260 [6.60]	1.000 [25.40]	SILVER	SMT	SIDE	6PDT	ASF62RL04	7-1825011-5
	T & R	0.230 [5.82]	0.800 [20.32]	0.260 [6.60]	1.000 [25.40]	GOLD	SMT	SIDE	6PDT	ASF62RGLTR04	7-1825011-4
	TUBE	0.230 [5.82]	0.800 [20.32]	0.260 [6.60]	1.000 [25.40]	GOLD	SMT	SIDE	6PDT	ASF62RGL04	7-1825011-3
	T & R	0.230 [5.82]	0.800 [20.32]	0.260 [6.60]	1.000 [25.40]	SILVER	SMT	TOP	6PDT	ASF62STR04	7-1825011-2
	TUBE	0.230 [5.82]	0.800 [20.32]	0.260 [6.60]	1.000 [25.40]	SILVER	SMT	TOP	6PDT	ASF62S04	7-1825011-1
	T & R	0.230 [5.82]	0.800 [20.32]	0.260 [6.60]	1.000 [25.40]	GOLD	SMT	TOP	6PDT	ASF62GSTR04	7-1825011-0
	TUBE	0.230 [5.82]	0.800 [20.32]	0.260 [6.60]	1.000 [25.40]	GOLD	SMT	TOP	6PDT	ASF62GS04	6-1825011-9
	T & R	0.230 [5.82]	0.800 [20.32]	0.260 [6.60]	1.000 [25.40]	SILVER	SMT	TOP	6PDT	ASF62LTR04	6-1825011-8
	TUBE	0.230 [5.82]	0.800 [20.32]	0.260 [6.60]	1.000 [25.40]	SILVER	SMT	TOP	6PDT	ASF62L04	6-1825011-7
	T & R	0.230 [5.82]	0.800 [20.32]	0.260 [6.60]	1.000 [25.40]	GOLD	SMT	TOP	6PDT	ASF62GLTR04	6-1825011-6
	TUBE	0.230 [5.82]	0.800 [20.32]	0.260 [6.60]	1.000 [25.40]	GOLD	SMT	TOP	6PDT	ASF62GL04	6-1825011-5
	TUBE	0.230 [5.82]	0.800 [20.32]	0.260 [6.60]	1.000 [25.40]	GOLD	THRU-HOLE	SIDE	6PDT	ASF62RG04	6-1825011-4
	TUBE	0.230 [5.82]	0.800 [20.32]	0.260 [6.60]	1.000 [25.40]	SILVER	THRU-HOLE	SIDE	6PDT	ASF62R04	6-1825011-3
	TUBE	0.230 [5.82]	0.800 [20.32]	0.260 [6.60]	1.000 [25.40]	GOLD	THRU-HOLE	TOP	6PDT	ASF62G04	6-1825011-2
	TUBE	0.230 [5.82]	0.800 [20.32]	0.260 [6.60]	1.000 [25.40]	SILVER	THRU-HOLE	TOP	6PDT	ASF6204	6-1825011-1
	T & R	0.230 [5.82]	0.900 [22.86]	0.360 [9.14]	1.100 [27.94]	SILVER	SMT	SIDE	4P3T	ASF43RSTR04	6-1825011-0
	TUBE	0.230 [5.82]	0.900 [22.86]	0.360 [9.14]	1.100 [27.94]	SILVER	SMT	SIDE	4P3T	ASF43RS04	5-1825011-9
	T & R	0.230 [5.82]	0.900 [22.86]	0.360 [9.14]	1.100 [27.94]	GOLD	SMT	SIDE	4P3T	ASF43RGSTR04	5-1825011-8
	TUBE	0.230 [5.82]	0.900 [22.86]	0.360 [9.14]	1.100 [27.94]	GOLD	SMT	SIDE	4P3T	ASF43RGS04	5-1825011-7
	T & R	0.230 [5.82]	0.900 [22.86]	0.360 [9.14]	1.100 [27.94]	SILVER	SMT	SIDE	4P3T	ASF43RLTR04	5-1825011-6
	TUBE	0.230 [5.82]	0.900 [22.86]	0.360 [9.14]	1.100 [27.94]	SILVER	SMT	SIDE	4P3T	ASF43RL04	5-1825011-5
	T & R	0.230 [5.82]	0.900 [22.86]	0.360 [9.14]	1.100 [27.94]	GOLD	SMT	SIDE	4P3T	ASF43RGLTR04	5-1825011-4
	TUBE	0.230 [5.82]	0.900 [22.86]	0.360 [9.14]	1.100 [27.94]	GOLD	SMT	SIDE	4P3T	ASF43RGL04	5-1825011-3
	T & R	0.230 [5.82]	0.900 [22.86]	0.360 [9.14]	1.100 [27.94]	SILVER	SMT	TOP	4P3T	ASF43STR04	5-1825011-2
	TUBE	0.230 [5.82]	0.900 [22.86]	0.360 [9.14]	1.100 [27.94]	SILVER	SMT	TOP	4P3T	ASF43S04	5-1825011-1
	T & R	0.230 [5.82]	0.900 [22.86]	0.360 [9.14]	1.100 [27.94]	GOLD	SMT	TOP	4P3T	ASF43GSTR04	5-1825011-0
	TUBE	0.230 [5.82]	0.900 [22.86]	0.360 [9.14]	1.100 [27.94]	GOLD	SMT	TOP	4P3T	ASF43GS04	4-1825011-9
	T & R	0.230 [5.82]	0.900 [22.86]	0.360 [9.14]	1.100 [27.94]	SILVER	SMT	TOP	4P3T	ASF43LTR04	4-1825011-8
	TUBE	0.230 [5.82]	0.900 [22.86]	0.360 [9.14]	1.100 [27.94]	SILVER	SMT	TOP	4P3T	ASF43L04	4-1825011-7
	T & R	0.230 [5.82]	0.900 [22.86]	0.360 [9.14]	1.100 [27.94]	GOLD	SMT	TOP	4P3T	ASF43GL04	4-1825011-6
	TUBE	0.230 [5.82]	0.900 [22.86]	0.360 [9.14]	1.100 [27.94]	GOLD	SMT	TOP	4P3T	ASF43GL04	4-1825011-5
	TUBE	0.230 [5.82]	0.900 [22.86]	0.360 [9.14]	1.100 [27.94]	GOLD	THRU-HOLE	SIDE	4P3T	ASF43RG04	4-1825011-4
	TUBE	0.230 [5.82]	0.900 [22.86]	0.360 [9.14]	1.100 [27.94]	SILVER	THRU-HOLE	SIDE	4P3T	ASF43R04	4-1825011-3
	TUBE	0.230 [5.82]	0.900 [22.86]	0.360 [9.14]	1.100 [27.94]	GOLD	THRU-HOLE	TOP	4P3T	ASF43G04	4-1825011-2
	TUBE	0.230 [5.82]	0.900 [22.86]	0.360 [9.14]	1.100 [27.94]	SILVER	THRU-HOLE	TOP	4P3T	ASF4304	4-1825011-1
	T & R	0.230 [5.82]	0.500 [12.70]	0.260 [6.60]	0.700 [17.78]	SILVER	SMT	SIDE	4PDT	ASF42RSTR04	4-1825011-0
	TUBE	0.230 [5.82]	0.500 [12.70]	0.260 [6.60]	0.700 [17.78]	SILVER	SMT	SIDE	4PDT	ASF42RS04	3-1825011-9
	T & R	0.230 [5.82]	0.500 [12.70]	0.260 [6.60]	0.700 [17.78]	GOLD	SMT	SIDE	4PDT	ASF42RGSTR04	3-1825011-8
	TUBE	0.230 [5.82]	0.500 [12.70]	0.260 [6.60]	0.700 [17.78]	GOLD	SMT	SIDE	4PDT	ASF42RGS04	3-1825011-7
	T & R	0.230 [5.82]	0.500 [12.70]	0.260 [6.60]	0.700 [17.78]	SILVER	SMT	SIDE	4PDT	ASF42RLTR04	3-1825011-6
	TUBE	0.230 [5.82]	0.500 [12.70]	0.260 [6.60]	0.700 [17.78]	SILVER	SMT	SIDE	4PDT	ASF42RL04	3-1825011-5
	T & R	0.230 [5.82]	0.500 [12.70]	0.260 [6.60]	0.700 [17.78]	GOLD	SMT	SIDE	4PDT	ASF42RGLTR04	3-1825011-4
	TUBE	0.230 [5.82]	0.500 [12.70]	0.260 [6.60]	0.700 [17.78]	GOLD	SMT	SIDE	4PDT	ASF42RGL04	3-1825011-3
	T & R	0.230 [5.82]	0.500 [12.70]	0.260 [6.60]	0.700 [17.78]	SILVER	SMT	TOP	4PDT	ASF42STR04	3-1825011-2
	TUBE	0.230 [5.82]	0.500 [12.70]	0.260 [6.60]	0.700 [17.78]	SILVER	SMT	TOP	4PDT	ASF42S04	3-1825011-1
	T & R	0.230 [5.82]	0.500 [12.70]	0.260 [6.60]	0.700 [17.78]	GOLD	SMT	TOP	4PDT	ASF42GSTR04	3-1825011-0
	TUBE	0.230 [5.82]	0.500 [12.70]	0.260 [6.60]	0.700 [17.78]	GOLD	SMT	TOP	4PDT	ASF42GS04	2-1825011-9
	T & R	0.230 [5.82]	0.500 [12.70]	0.260 [6.60]	0.700 [17.78]	SILVER	SMT	TOP	4PDT	ASF42LTR04	2-1825011-8
	TUBE	0.230 [5.82]	0.500 [12.70]	0.260 [6.60]	0.700 [17.78]	SILVER	SMT	TOP	4PDT	ASF42L04	2-1825011-7
	T & R	0.230 [5.82]	0.500 [12.70]	0.260 [6.60]	0.700 [17.78]	GOLD	SMT	TOP	4PDT	ASF42GLTR04	2-1825011-6
	TUBE	0.230 [5.82]	0.500 [12.70]	0.260 [6.60]	0.700 [17.78]	GOLD	SMT	TOP	4PDT	ASF42GL04	2-1825011-5
	TUBE	0.230 [5.82]	0.500 [12.70]	0.260 [6.60]	0.700 [17.78]	GOLD	THRU-HOLE	SIDE	4PDT	ASF42RG04	2-1825011-4
	TUBE	0.230 [5.82]	0.500 [12.70]	0.260 [6.60]	0.700 [17.78]	SILVER	THRU-HOLE	SIDE	4PDT	ASF42R04	2-1825011-3
	TUBE	0.230 [5.82]	0.500 [12.70]	0.260 [6.60]	0.700 [17.78]	GOLD	THRU-HOLE	TOP	4PDT	ASF42G04	2-1825011-2
	TUBE	0.230 [5.82]	0.500 [12.70]	0.260 [6.60]	0.700 [17.78]	SILVER	THRU-HOLE	TOP	4PDT	ASF4204	2-1825011-1
	T & R	0.105 [2.67]	0.200 [5.08]	0.260 [6.60]	0.400 [10.16]	SILVER	SMT	SIDE	DPDT	ASF22RSTR04	2-1825011-0
	TUBE	0.105 [2.67]	0.200 [5.08]	0.260 [6.60]	0.400 [10.16]	SILVER	SMT	SIDE	DPDT	ASF22RS04	1-1825011-9
	T & R	0.105 [2.67]	0.200 [5.08]	0.260 [6.60]	0.400 [10.16]	GOLD	SMT	SIDE	DPDT	ASF22RGSTR04	1-1825011-8
	TUBE	0.105 [2.67]	0.200 [5.08]	0.260 [6.60]	0.400 [10.16]	GOLD	SMT	SIDE	DPDT	ASF22RGS04	1-1825011-7
	T & R	0.105 [2.67]	0.200 [5.08]	0.260 [6.60]	0.400 [10.16]	SILVER	SMT	SIDE	DPDT	ASF22RLTR04	1-1825011-6
	TUBE	0.105 [2.67]	0.200 [5.08]	0.260 [6.60]	0.400 [10.16]	SILVER	SMT	SIDE	DPDT	ASF22RL04	1-1825011-5
	T & R	0.105 [2.67]	0.200 [5.08]	0.260 [6.60]	0.400 [10.16]	GOLD	SMT	SIDE	DPDT	ASF22RGLTR04	1-1825011-4
	TUBE	0.105 [2.67]	0.200 [5.08]	0.260 [6.60]	0.400 [10.16]	GOLD	SMT	SIDE	DPDT	ASF22RGL04	1-1825011-3
	T & R	0.105 [2.67]	0.200 [5.08]	0.260 [6.60]	0.400 [10.16]	SILVER	SMT	TOP	DPDT	ASF22STR04	1-1825011-2
	TUBE	0.105 [2.67]	0.200 [5.08]	0.260 [6.60]	0.400 [10.16]	SILVER	SMT	TOP	DPDT	ASF22S04	1-1825011-1
	T & R	0.105 [2.67]	0.200 [5.08]	0.260 [6.60]	0.400 [10.16]	GOLD	SMT	TOP	DPDT	ASF22GSTR04	1-1825011-0
	TUBE	0.105 [2.67]	0.200 [5.08]	0.260 [6.60]	0.400 [10.16]	GOLD	SMT	TOP	DPDT	ASF22GS04	1825011-9
	T & R	0.105 [2.67]	0.200 [5.08]	0.260 [6.60]	0.400 [10.16]	SILVER	SMT	TOP	DPDT	ASF22LTR04	1825011-8
	TUBE	0.105 [2.67]	0.200 [5.08]	0.260 [6.60]	0.400 [10.16]	SILVER	SMT	TOP	DPDT	ASF22L04	1825011-7
	T & R	0.105 [2.67]	0.200 [5.08]	0.260 [6.60]	0.400 [10.16]	GOLD	SMT	TOP	DPDT	ASF22GLTR04	1825011-6
	TUBE	0.105 [2.67]	0.200 [5.08]	0.260 [6.60]	0.400 [10.16]	GOLD	SMT	TOP	DPDT	ASF22GL04	1825011-5
	TUBE	0.105 [2.67]	0.200 [5.08]	0.260 [6.60]	0.400 [10.16]	GOLD	THRU-HOLE	SIDE	DPDT	ASF22RG04	1825011-4
	TUBE	0.105 [2.67]	0.200 [5.08]	0.260 [6.60]	0.400 [10.16]	SILVER	THRU-HOLE	SIDE	DPDT	ASF22R04	1825011-3
	TUBE	0.105 [2.67]	0.200 [5.08]	0.260 [6.60]	0.400 [10.16]	GOLD	THRU-HOLE	TOP	DPDT	ASF22G04	1825011-2
	TUBE	0.105 [2.67]	0.200 [5.08]	0.260 [6.60]	0.400 [10.16]	SILVER	THRU-HOLE	TOP	DPDT	ASF2204	1825011-1

NOTES: UNLESS OTHERWISE SPECIFIED

1. ALL SWITCHES HAVE OPEN ENDS EXCEPT TOP FLUSH ACTUATOR, WHICH COMES STANDARD WITH TAPE SEAL.
2. TAPE AND REEL PER EIA 481 OR 22" ANTI-STATIC TUBES
3. ALL MATERIAL AND FINISHES SHALL COMPLY WITH EU DIRECTIVE 2002/95/EC OF 27JAN2003(ROHS)
4. STANDARD PRODUCT(AFTER WELD) HEIGHT IS ALLOWED UP TO .180
5. PARTS SUPPLIED WITHOUT TAPE SEAL.

SPECIFICATIONS:

MATERIAL:
BASE & COVER- PCT UL94V-0, BLACK.
ACTUATOR- NYLON PA46 UL94V-0, NATURAL
MOVING CONTACT- COPPER ALLOY,
SILVER OR GOLD OVER NICKEL
FIXED CONTACT- COPPER ALLOY
SILVER OR GOLD OVER NICKEL
TERMINAL- COPPER ALLOY TIN OVER NICKEL

ELECTRICAL:
CONTACT RATING: SILVER: 300 MILLIAMPS @ 115 VAC.
GOLD: 0.4 VA 20 VDC.
CONTACT RESISTANCE: INITIAL 40 MILLIOHMS MAX.
INSULATION RESISTANCE: 1000 MEGOHMS MAX.
DIELECTRIC STRENGTH: 600 VOLTS RMS AT SEA LEVEL.
LIFE EXPECTANCY: 15,000 CYCLES MIN.

ENVIRONMENTAL:
OPERATING TEMPERATURE: -40°F TO +176°F (-40° TO 80°)
SOLDER HEAT RESISTANCE PER 109-202, COND B (THRU-HOLE) & 109-201, COND B (SMT)
PROCESS CLEANING: WILL WITHSTAND AQUEOUS OR SOLVENT CLEANING PROCESSES.
SOLDERABILITY PER EIA 364-52 CLASS 2 CATEGORY 1

THIS DRAWING IS A CONTROLLED DOCUMENT.

DIMENSIONS: INCHES [mm]

TOLERANCES UNLESS OTHERWISE SPECIFIED:
0 PLC ± -
1 PLC ± -
2 PLC ± -
3 PLC ± .010[0.25]
4 PLC ± -
ANGLES ± 1°

MATERIAL: SEE SPECIFICATIONS
FINISH: SEE SPECIFICATIONS

DWN B.S.VISWESWARA 20FEB05
CHK M.S.SARVER 20FEB05
APVD M.S.SARVER 20FEB05
PRODUCT SPEC —
APPLICATION SPEC —
WEIGHT —

tyco Electronics
Tyco Electronics Corporation
Harrisburg, PA 17105-3608

NAME: SLIDE SWITCH ASF, AUTO-INSERTABLE, THRU-HOLE AND SURFACE MOUNT

SIZE	CAGE CODE	DRAWING NO	RESTRICTED TO
A1	00779	C-1825011	—

CUSTOMER DRAWING
SCALE 5:1 SHEET 1 OF 2 REV B

THIS DRAWING IS UNPUBLISHED. RELEASED FOR PUBLICATION -,- .
© COPYRIGHT - BY TYCO ELECTRONICS CORPORATION. ALL RIGHTS RESERVED.

LOC	DIST
AD	00

REVISIONS

P	LTR	DESCRIPTION	DATE	DWN	APVD
	—	SEE SHEET 1	—	—	—

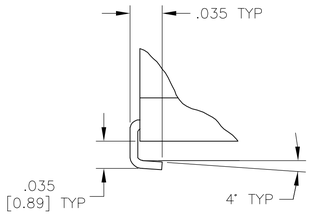

DETAIL A
SCALE 10:1

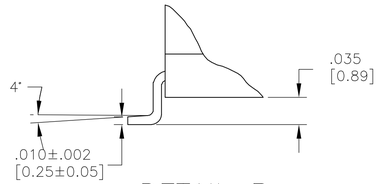

DETAIL B
SCALE 10:1

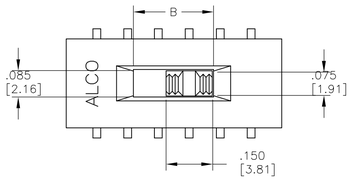

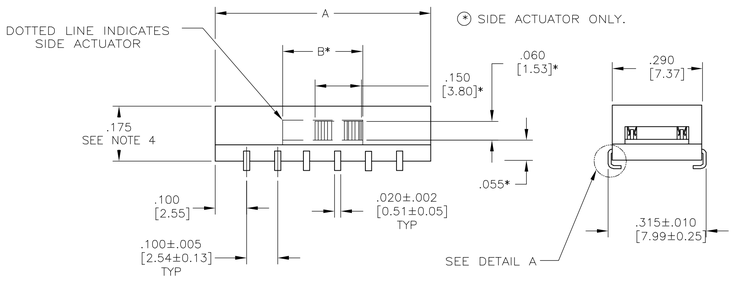

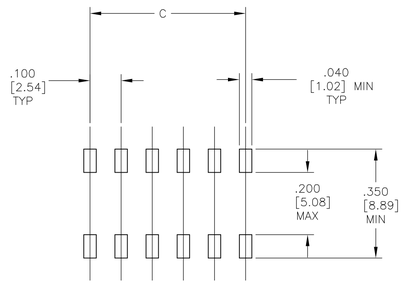

PRINTED CIRCUIT BOARD
PAD LAYOUT

"S" J-LEAD TYPE SURFACE MOUNT

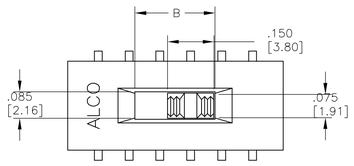

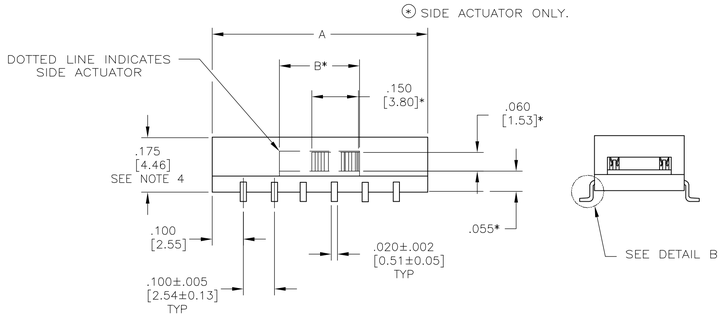

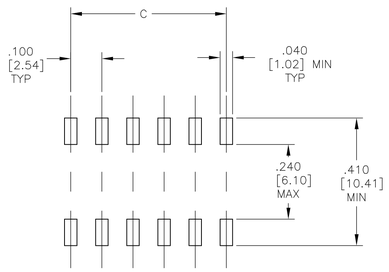

PRINTED CIRCUIT BOARD
PAD LAYOUT

"L" GULL WING TYPE SURFACE MOUNT

THIS DRAWING IS A CONTROLLED DOCUMENT.	DWN B.S.VISWESWARA 20FEB05	tyco Electronics	Tyco Electronics Corporation, Harrisburg, PA 17105-3608
DIMENSIONS: INCHES [mm]	CHK M.S.SARVER 20FEB05		
TOLERANCES UNLESS OTHERWISE SPECIFIED: 0 PLC ± - ; 1 PLC ± - ; 2 PLC ± - ; 3 PLC ± .010[0.25] ; 4 PLC ± - ; ANGLES ± 1°	APVD M.S.SARVER 20FEB05	NAME	SLIDE SWITCH ASF, AUTO-INSERTABLE, THRU-HOLE AND SURFACE MOUNT —
	PRODUCT SPEC —		
	APPLICATION SPEC —	SIZE A1 / CAGE CODE 00779	DRAWING NO C-1825011 / RESTRICTED TO —
MATERIAL SEE SHEET 1	WEIGHT —		
FINISH SEE SHEET 1	CUSTOMER DRAWING	SCALE 4:1 / SHEET 2 OF 2	REV B