Alle Rechte vorbehalten/ *All rights reserved*

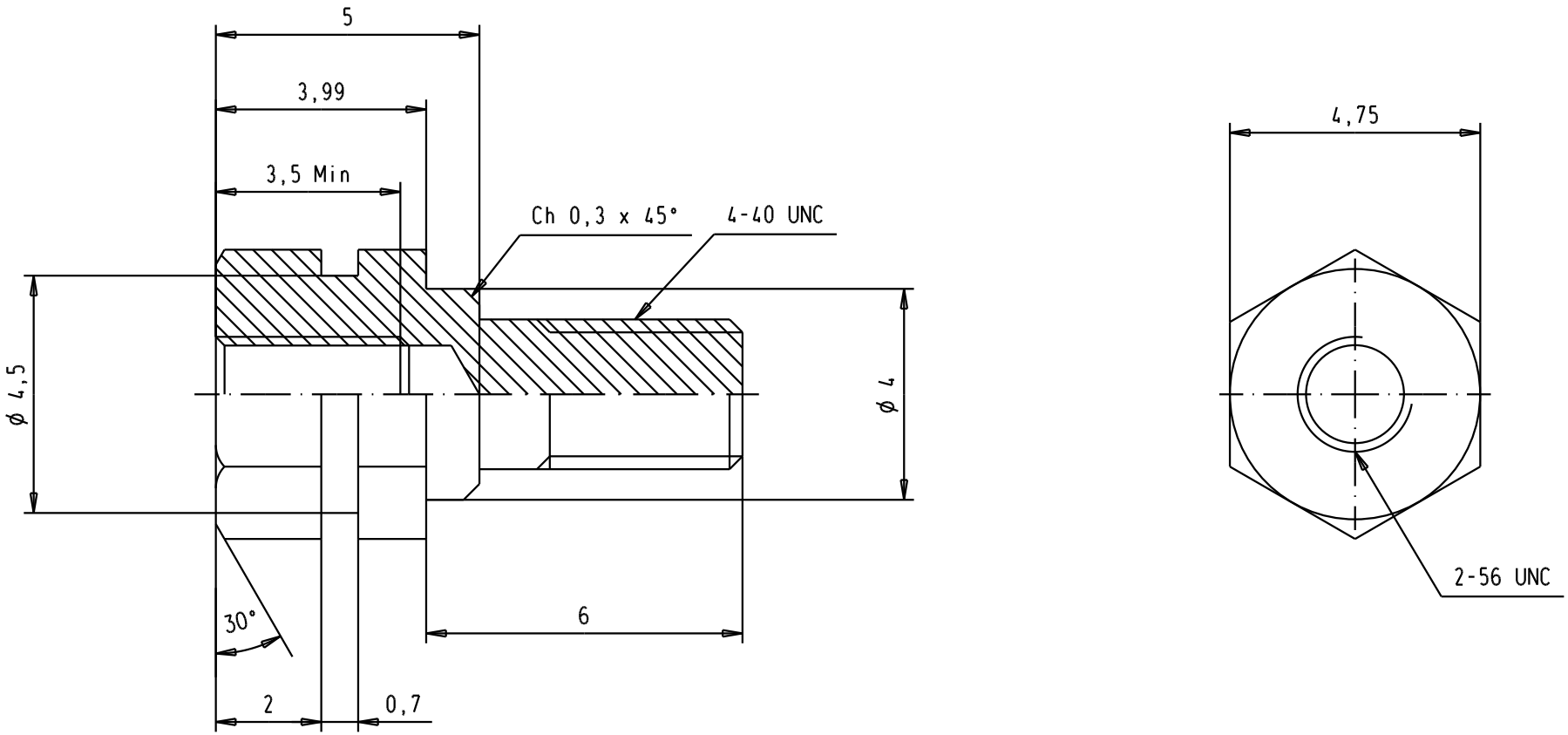


Material : Copper Alloy
Plating : Nickel
Screwing torque for 4-40 UNC : Max 0,46 Nm
Screwing torque for 2-56 UNC : Max 0,21 Nm

| | | | | Dat. | Name |
|---|---|---|---|---|---|
| | | | Detail. | 04/07/06 | PK |
| | | | Insp. | | |
| | | | Stand. | | |
| 33774 | 04/07/06 | PK | | | |
| Mod. | Dat. | Name | | | |

HARTING EURL
F-95972 Paris

All Dim. in mm
Orig. Size DIN A 4

Har-mik:
Female screw-lock
with 0,7 mm slot

Maßstab/ *Scale* 8:1

TB 60 01 000 9019

Sub.

Blatt/ *Page* 1/1