THIS DRAWING IS UNPUBLISHED. RELEASED FOR PUBLICATION -,- .
© COPYRIGHT - By - ALL RIGHTS RESERVED.

LOC	DIST
AF	50

REVISIONS

P	LTR	DESCRIPTION	DATE	DWN	APVD
	R	REVISED PER ECR-12-013518	23NOV2012	KH	PD

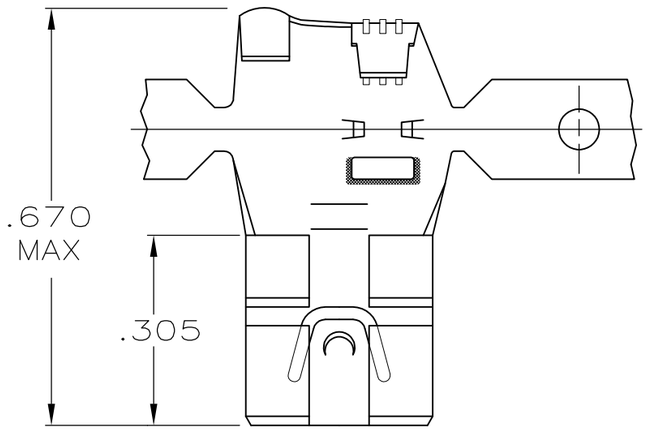

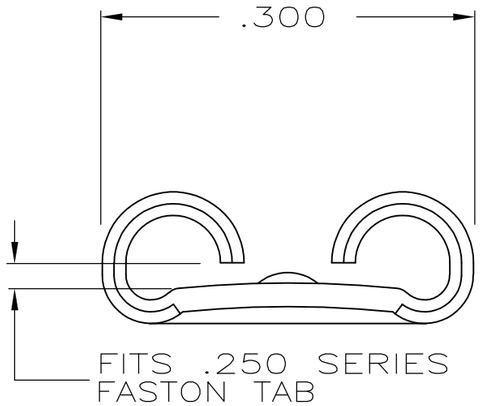

VIEW A—A

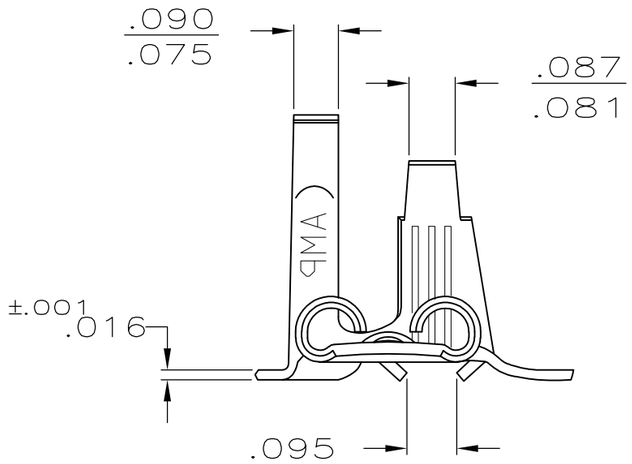

1 CONTINUOUS STRIP ON REELS.

2 STRESS RELIEVE THIS PART

3 THIS PART MUST MATE TO A TAB WITH A HOLE, NOT A DIMPLE.

	FINISH	INSULATION RANGE	WIRE SIZE	MATING TAB THK ±.001	PART NO
3	–	.110–.210	18–12	.032	63445–5
2	TIN	.110–.210	18–12	.032	63445–4
OBSOLETE	~~SILVER~~	~~.110–.210~~	~~18–12~~	~~.032~~	~~63445–3~~
	TIN	.110–.210	18–12	.032	63445–2
	–	.110–.210	18–12	.032	63445–1

THIS DRAWING IS A CONTROLLED DOCUMENT.

DIMENSIONS: INCHES

TOLERANCES UNLESS OTHERWISE SPECIFIED:
0 PLC ± –
1 PLC ± –
2 PLC ± –
3 PLC ± .010
4 PLC ± –
ANGLES ± –

MATERIAL: BRASS

FINISH: –

DWN JR RUTH 7/10/86
CHK G YETTER 7/11/86
APVD C MEYERS 7/11/86
PRODUCT SPEC –
APPLICATION SPEC –
WEIGHT –

TE Connectivity

NAME: .250 SERIES FLAG FASTON RECEPTACLE –

SIZE	CAGE CODE	DRAWING NO	RESTRICTED TO
A3	00779	C-63445	–

CUSTOMER DRAWING

SCALE 4:1 SHEET 1 OF 1 REV R