THIS DRAWING IS UNPUBLISHED. RELEASED FOR PUBLICATION -,- .
© COPYRIGHT - By - ALL RIGHTS RESERVED.

LOC	DIST
AD	39

REVISIONS

P	LTR	DESCRIPTION	DATE	DWN	APVD
	N4	REVISED PER ECO-11-004820	11MAR11	RK	HMR

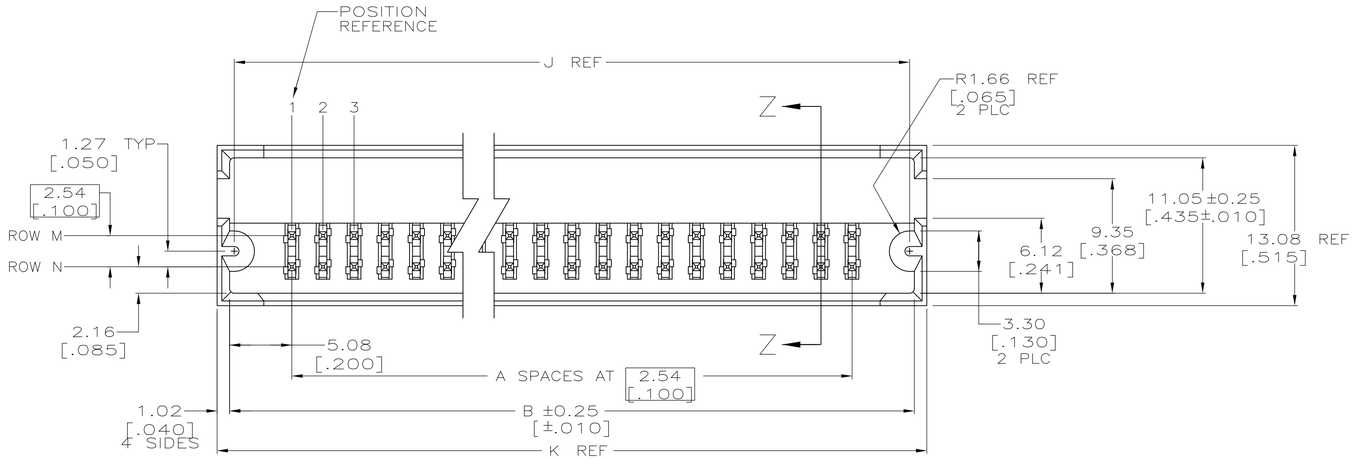

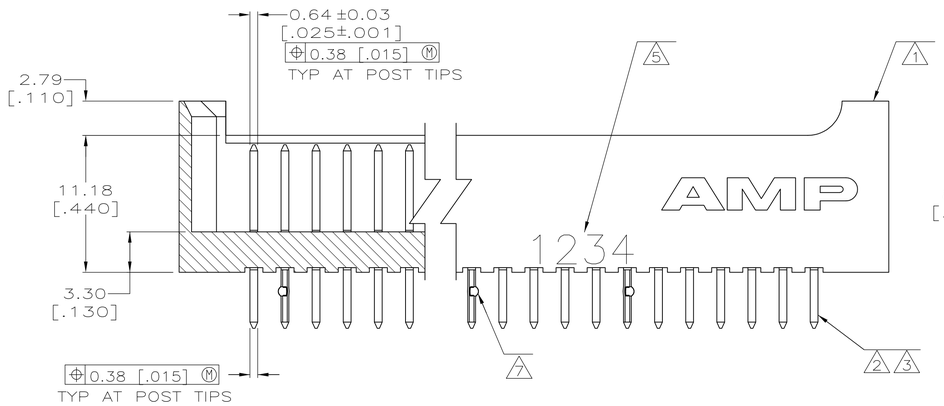

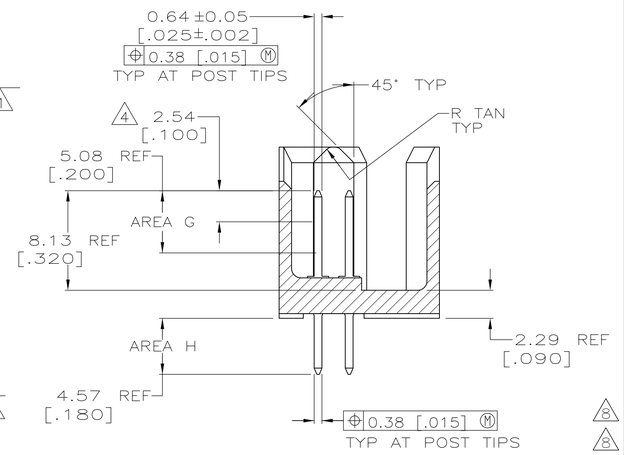

SECTION Z–Z
ROTATED 90° CW

OBSOLETE

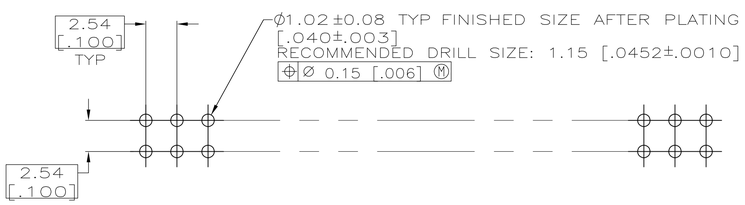

RECOMMENDED MOUNTING HOLE LAYOUT

1. HOUSING: FLAME RETARDANT THERMOPLASTIC; COLOR: BLACK.
2. POST: COPPER ALLOY.
3. POST FINISH: 0.00076 [.000030] GOLD IN AREA G, 0.00254–0.00508 [.000100–.000200] BRIGHT TIN–LEAD IN AREA H, ALL OVER 0.00127 [.000050] NICKEL.
4. POINT OF MEASUREMENT FOR PLATING THICKNESS.
5. RECESSED DATE CODE.
6. CSA LOGO HOT STAMPED WHITE ON HOUSING.
7. BOARD RETENTION WHERE INDICATED.
8. PRELIMINARY PART – NOT RELEASED FOR PRODUCTION
9. POST FINISH: 0.00076 [.000030] GOLD IN AREA G, 0.00254–0.00508 [.000100–.000200] MATTE TIN IN AREA H, ALL OVER 0.00127 [.000050] NICKEL.
10. ROHS 2002/95/EC COMPLIANT
11. OBSOLETE PARTS: OBSOLETE CIS STREAMLINING PER D.RENAUD/D.SINISI

	ROW M	ROW N	K	J	B	A	NO OF POSN	PART NUMBER
9	1, 4	1, 4	19.81 [.780]	17.02 [.670]	17.78 [.700]	3	8	10 11 7-534978-1
	1,3	1,3	17.27 [.680]	14.48 [.570]	15.24 [.600]	2	6	10 11 7-534978-0
	2,22,43,64	2,22,43,64	174.75 [6.880]	171.96 [6.770]	172.72 [6.800]	64	130	10 11 6-534978-9
	2,17,33,39	2,17,33,39	136.65 [5.380]	133.86 [5.270]	134.62 [5.300]	49	100	10 11 6-534978-8
	2, 24, 47	2, 24, 47	131.57 [5.180]	128.78 [5.070]	129.54 [5.100]	47	96	10 11 6-534978-7
	2, 3, 4	2, 3, 4	24.89 [.980]	22.10 [.870]	22.86 [.900]	5	12	10 11 6-534978-6
	2, 18, 34	2, 18, 34	98.55 [3.880]	95.76 [3.770]	96.52 [3.800]	34	70	10 6-534978-5
	2, 23, 47, 69	2, 23, 47, 69	162.05 [7.380]	159.26 [7.270]	160.02 [7.300]	69	140	10 11 6-534978-4
	2, 20, 40, 59	2, 20, 40, 59	162.05 [6.380]	159.26 [6.270]	160.02 [6.300]	59	120	10 11 6-534978-3
	2, 18, 37, 54	2, 18, 37, 54	149.35 [5.880]	146.56 [5.770]	147.32 [5.800]	54	110	10 6-534978-2
	2, 20, 39	2, 20, 39	111.25 [4.380]	108.46 [4.270]	109.22 [4.300]	39	80	10 6-534978-1
	2, 18, 35	2, 18, 35	101.09 [3.980]	98.30 [3.870]	99.06 [3.900]	35	72	10 6-534978-0
	2, 15, 29	2, 15, 29	85.85 [3.380]	83.06 [3.270]	83.82 [3.300]	29	60	10 5-534978-9
	8, 13, 18	8, 13, 18	73.15 [2.880]	70.36 [2.770]	71.12 [2.800]	24	50	10 5-534978-8
	5, 10, 15	5, 10, 15	60.45 [2.380]	57.66 [2.270]	58.42 [2.300]	19	40	10 5-534978-7
	4, 9, 14	4, 9, 14	55.37 [2.180]	52.58 [2.070]	53.34 [2.100]	17	36	10 5-534978-6
	3, 8, 13	3, 8, 13	47.75 [1.880]	44.96 [1.770]	45.72 [1.800]	14	30	10 5-534978-5
	5, 6, 7	5, 6, 7	40.13 [1.580]	37.34 [1.470]	38.10 [1.500]	11	24	10 5-534978-4
	4, 5, 6	4, 5, 6	35.05 [1.380]	32.26 [1.270]	33.02 [1.300]	9	20	10 5-534978-3
	3, 4, 5	3, 4, 5	29.97 [1.180]	27.18 [1.070]	27.94 [1.100]	7	16	10 5-534978-2
	2, 33, 67, 99	2, 33, 67, 99	263.65 [10.380]	260.86 [10.270]	261.62 [10.300]	99	200	11 5-534978-1
8 8	1, 4	1, 4	19.81 [.780]	17.02 [.670]	17.78 [.700]	3	8	2-534978-1
	1,3	1,3	17.27 [.680]	14.48 [.570]	15.24 [.600]	2	6	2-534978-0
	2,22,43,64	2,22,43,64	174.75 [6.880]	171.96 [6.770]	172.72 [6.800]	64	130	11 1-534978-9
	2,17,33,39	2,17,33,39	136.65 [5.380]	133.86 [5.270]	134.62 [5.300]	49	100	11 1-534978-8
	2, 24, 47	2, 24, 47	131.57 [5.180]	128.78 [5.070]	129.54 [5.100]	47	96	11 1-534978-7
	2, 3, 4	2, 3, 4	24.89 [.980]	22.10 [.870]	22.86 [.900]	5	12	11 1-534978-6
	2, 18, 34	2, 18, 34	98.55 [3.880]	95.76 [3.770]	96.52 [3.800]	34	70	1-534978-5
	2, 23, 47, 69	2, 23, 47, 69	162.05 [7.380]	159.26 [7.270]	160.02 [7.300]	69	140	1-534978-4
	2, 20, 40, 59	2, 20, 40, 59	162.05 [6.380]	159.26 [6.270]	160.02 [6.300]	59	120	11 1-534978-3
	2, 18, 37, 54	2, 18, 37, 54	149.35 [5.880]	146.56 [5.770]	147.32 [5.800]	54	110	1-534978-2
	2, 20, 39	2, 20, 39	111.25 [4.380]	108.46 [4.270]	109.22 [4.300]	39	80	1-534978-1
	2, 18, 35	2, 18, 35	101.09 [3.980]	98.30 [3.870]	99.06 [3.900]	35	72	1-534978-0
3	2, 15, 29	2, 15, 29	85.85 [3.380]	83.06 [3.270]	83.82 [3.300]	29	60	534978-9
	8, 13, 18	8, 13, 18	73.15 [2.880]	70.36 [2.770]	71.12 [2.800]	24	50	534978-8
	5, 10, 15	5, 10, 15	60.45 [2.380]	57.66 [2.270]	58.42 [2.300]	19	40	534978-7
	4, 9, 14	4, 9, 14	55.37 [2.180]	52.58 [2.070]	53.34 [2.100]	17	36	534978-6
	3, 8, 13	3, 8, 13	47.75 [1.880]	44.96 [1.770]	45.72 [1.800]	14	30	534978-5
	5, 6, 7	5, 6, 7	40.13 [1.580]	37.34 [1.470]	38.10 [1.500]	11	24	534978-4
	4, 5, 6	4, 5, 6	35.05 [1.380]	32.26 [1.270]	33.02 [1.300]	9	20	534978-3
	3, 4, 5	3, 4, 5	29.97 [1.180]	27.18 [1.070]	27.94 [1.100]	7	16	534978-2
	2, 33, 67, 99	2, 33, 67, 99	263.65 [10.380]	260.86 [10.270]	261.62 [10.300]	99	200	11 534978-1
FINISH	ROW M	ROW N						
	BOARD RETENTION LOCATION 7							

THIS DRAWING IS A CONTROLLED DOCUMENT.

DIMENSIONS: INCHES

TOLERANCES UNLESS OTHERWISE SPECIFIED:
0 PLC ± –
1 PLC ± –
2 PLC ± 0.13 [.005]
3 PLC ± –
4 PLC ± –
ANGLES ± –

MATERIAL 1 2

FINISH SEE TABLE

DWN K.L.CLOUSER/UTA 4/8/91
CHK D SARVER 6/19/91
APVD –
PRODUCT SPEC –
APPLICATION SPEC –
WEIGHT –

TE Connectivity

NAME HEADER ASSY, MOD II, DOUBLE ROW, 2.54 X 2.54 [.100 X .100] CL, 0.64 [.025] SQUARE POST,BOARD RETENTION FEATURE

SIZE	CAGE CODE	DRAWING NO	RESTRICTED TO
A1	00779	C-534978	–

CUSTOMER DRAWING SCALE 4:1 SHEET 1 OF 1 REV N4