DATE	REV	ECN	APP'D. BY
2/2/06	A1	7457	JM
3/21/06	A2	7549	SAW
10-16-09	A3	8847	TRM

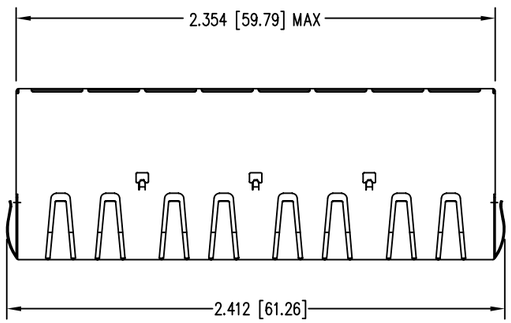

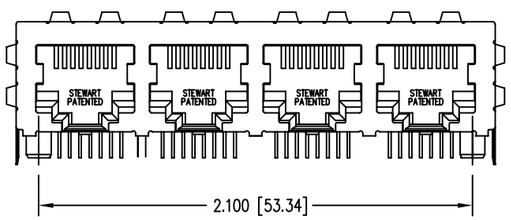

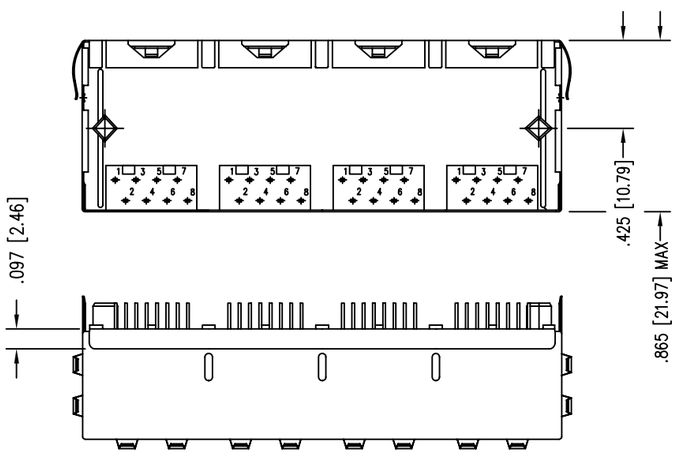

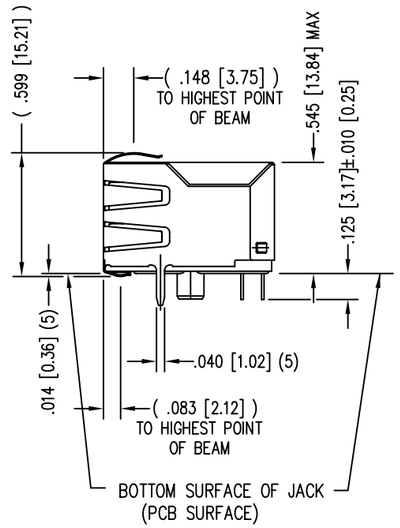

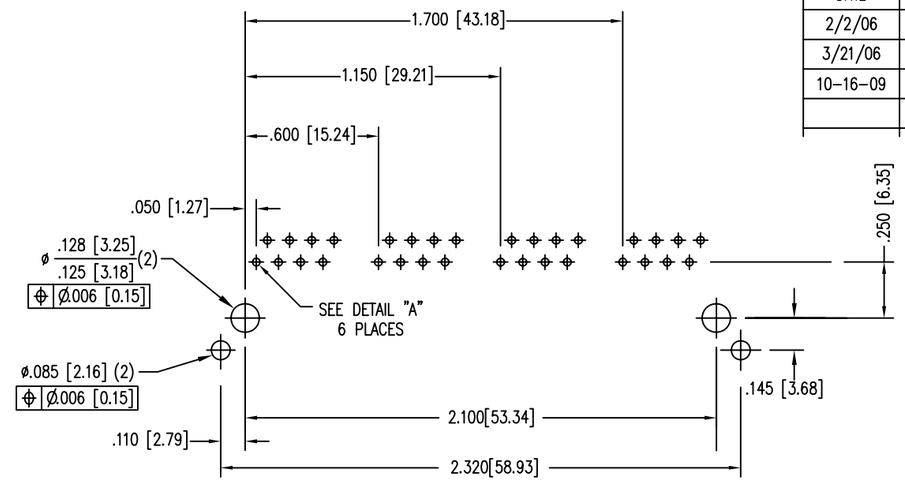

P.C.B. RECOMMENDED HOLE LAYOUT
SEEN FROM COMPONET SIDE

ALL CENTERLINE DIMENSIONS ARE BASIC.

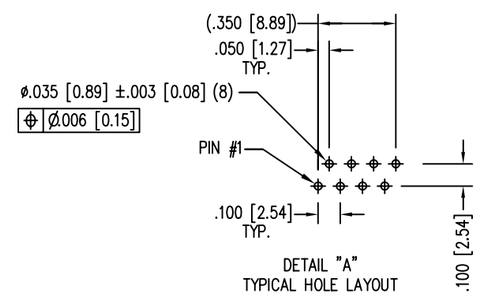

DETAIL "A"
TYPICAL HOLE LAYOUT

NOTES:

1. CONNECTOR MATERIALS:
   HOUSING: THERMOPLASTIC UL94 V-0
   CONTACTS/SHIELD: COPPER ALLOY
   SHIELD PLATING: NICKEL OR TIN
   CONTACT PLATING: SELECTIVE GOLD IN CONTACT AREA
   SEE CHART FOR PART NUMBER
2. FOR PRODUCT SPECIFICATIONS SEE PR022-01.
3. DIMENSIONS AND TOLERANCES COMPLY WITH FCC/CFR 47, PART 68.
4. THE SUGGESTED PANEL OPENING IS INTENDED TO GIVE USER THE ABILITY TO HAVE REASONABLE JACK/PANEL CLEARANCES, YET MAINTAIN GROUNDING CAPABILITY. THESE VARIABLES CAN BE ADJUSTED IN EITHER DIRECTION BUT MAY CARRY SOME CONSEQUENCES IN THE FORM OF LOWER MATING FORCES OR TIGHTER ASSEMBLY TOLERANCES.
5. DESIGNE FOR CATEGORY 5/5e APPLICATIONS.

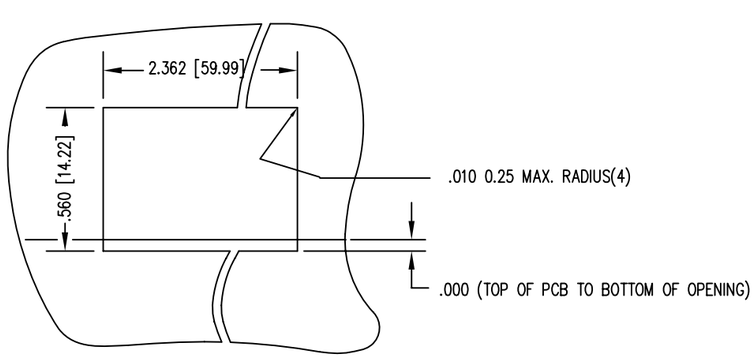

SUGGESTED PANEL OPENING

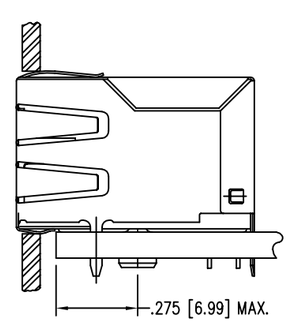

30 MICRO-INCHES [0.76um]	SS-718804S-A-PG4-BA
CONTACT PLATING IN MATING AREA	PART NUMBER

THIRD ANGLE PROJECTION

DO NOT SCALE DRAWING

DRAWING IS SUBJECT TO CHANGE WITHOUT NOTICE

DIMENSIONS: INCHES [METRIC]

UNLESS OTHERWISE SPECIFIED TOLERANCES ARE ±.005 [0.13] ANGLES ARE ± 1°

SHEET NO. 1 OF 2

RoHS 2002/95/EC

Bel Stewart Connector

11118 Susquehanna Trail South
Glen Rock, PA 17327-9199
(717) 235-7512 Fax: (717) 235-7954 http://www.stewartconnector.com

TITLE: EMI-RFI ONE PIECE SHIELDED, ESD GROUNDED 4 PORT PCB HARMONICA JACK PAC

THIS DRAWING AND THE SUBJECT MATTER SHOWN THEREON ARE CONFIDENTIAL AND THE PROPRIETARY PROPERTY OF BEL STEWART CONNECTOR AND SHALL NOT BE REPRODUCED, COPIED, OR USED IN ANY MANNER WITHOUT PRIOR WRITTEN CONSENT OF BEL STEWART CONNECTOR. THE SUBJECT MATTER MAY BE PATENTED OR A PATENT MAY BE PENDING.

DRN BY:	KRL	DATE	2/2/06
APPD BY:	JM	DATE	2-3-06
DWG NO.	CT710074	REV.	A3

REV. 6/3/05

AutoCAD