PART NUMBER	LED COLOR	
	POSITION 1	POSITION 2
553-0112-206F	RED DIFF.	GREEN DIFF

REV	ECN NO	REVISIONS	DRN	CKD	APP	DATE
A	———	NEW RELEASE	SM			

NOTES:

1. LEADS TO FIT INTO .043 DIA. HOLES SPACED AS PER PATTERN.
2. WELDING FLASH .010 MAX. ON BOTH ENDS IS PERMISSIBLE. WELDING JOINT MUST WITHSTAND 5 LB. MIN. FORCE/BILEVEL HOUSING, APPLIED AS PER DRAWING.
3. LED LEAD DIMENSIONS SHOWN ARE MEASURED AT HOUSING EXIT.
4. PACKAGE PARTS IN TUBE WITH ASSOCIATED END PLUG (19 PC'S PER TUBE). MARK LABEL WITH MFG., P/N, DATE CODE, QTY/TUBE.
5. REFER TO DIALIGHT PART NUMBER 553-0112-206F.
6. THIS ASSEMBLY CONTAINS ELECTROSTATIC DISCHARGE SENSITIVE DEVICES (ESDS). MAINTAIN ALL PRECAUTIONARY MEASURES DURING ASSEMBLY, HANDLING AND STORAGE IN ACCORDANCE WITH IPC-A-610.
7. DIE: GaP (GREEN DIFFUSED)
   GaAs (RED DIFFUSED)

ABSOLUTE MAXIMUM RATINGS AT 25°C AMBIENT	COLOR	TYP	UNITS
POWER DISSIPATION	GREEN DIFF. RED DIFF	75 60	mW
DERATE LINEARLY FROM 50°C	GREEN DIFF. RED DIFF	0.50 0.50	mA/°C
CONTINOUS FORWARD CURRENT	GREEN DIFF. RED DIFF	25 20	mA
PEAK FORWARD CURRENT	GREEN DIFF. RED DIFF	60 60	mA
PEAK REVERSE VOLTAGE	GREEN DIFF. RED DIFF	3 3	V
LEAD SOLDERING TEMP., 5 SEC., 1/16" FROM BASE	GREEN DIFF. RED DIFF	260	°C
OPERATING TEMPERATURE	GREEN DIFF. RED DIFF	-25 TO +85	°C
STORAGE TEMPERATURE	GREEN DIFF. RED DIFF	-30 TO +100	°C

OPERATING CHARACTERISTICS AT 25°C AMBIENT						
LED CHARACTERISTICS	COLOR	MIN	TYP	MAX	UNITS	TEST CONDITIONS
LUMINOUS INTENSITY	GREEN DIFF. RED DIFF	5.6 3.6	16.0 10	— —	mcd	I_F = 10mA
FORWARD VOLTAGE	GREEN DIFF. RED DIFF		2.1 2.0	3.0 3.0	V	I_F = 10mA
REVERSE CURRENT REVERSE VOLTAGE	GREEN DIFF. RED DIFF	— 3.0		10 —	A	V_R = 3 V
PEAK WAVELENGTH	GREEN DIFF. RED DIFF		563 650		nm	
INTENSITY ANGLE	GREEN DIFF. RED DIFF		45 45		DEGREES	I_F = 10mA

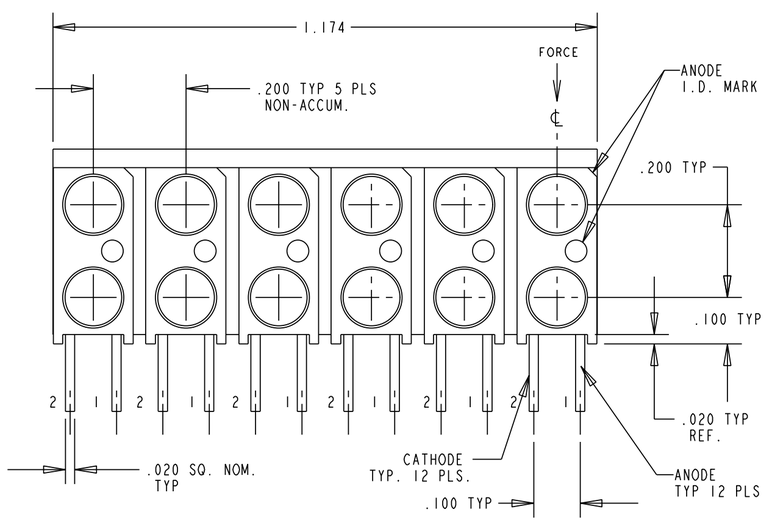

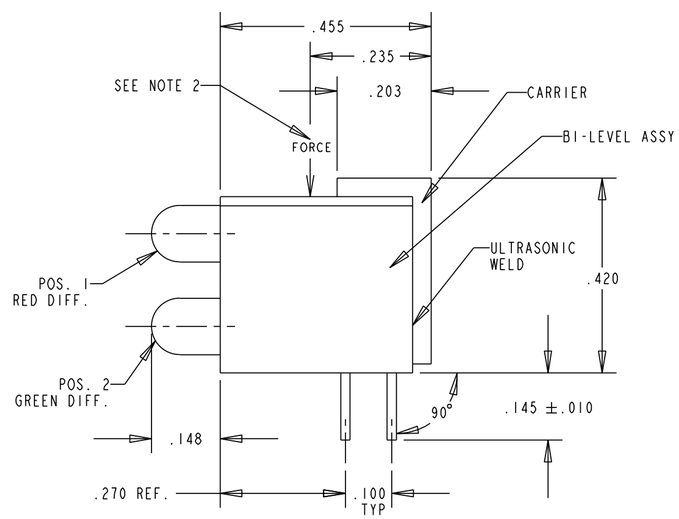

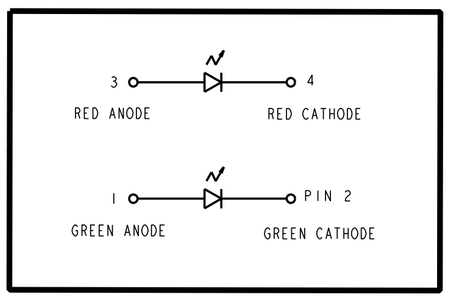

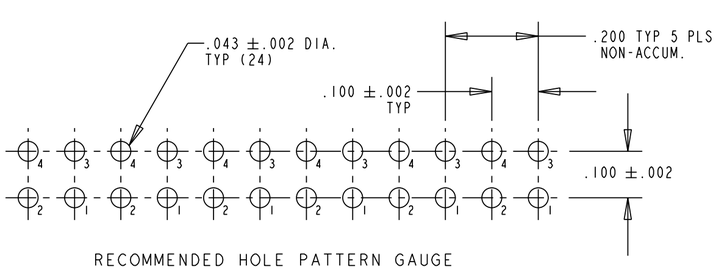

RECOMMENDED HOLE PATTERN GAUGE

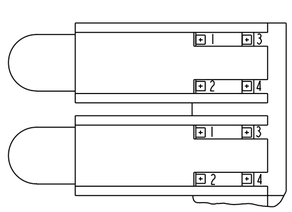

RoHS Compliant 553-0112-206F
Part Numbers with the "F" suffix ending are RoHS Compliant.
Packaging is marked with "RoHS Compliant" label or equivalent markings.
Parts can be wave soldered, dip soldered or hand soldered using typical lead-free soldering process with max 260°C temp. for 5 sec.

ATTENTION:
OBSERVE PRECAUTIONS FOR HANDLING ELECTROSTATIC SENSITIVE DEVICES

THIS DRAWING AND THE CONTENTS HEREIN ARE CONFIDENTIAL AND THE SOLE PROPERTY OF DIALIGHT. REPRODUCTION OF THIS DRAWING OR CONSTRUCTION OF ANY PARTS WITHIN THIS DRAWING ARE FORBIDDEN WITHOUT THE WRITTEN CONSENT OF DIALIGHT.

SCALE: DRAWING SCALE
ALL DIM'S IN: INCHES (MM)
TOLERANCES:
UNLESS OTHERWISE SPECIFIED
FRACTIONS: ±1/64
DECIMALS (.XX): ±.01
DECIMALS (.XXX): ±.005
DECIMALS (.XXXX): ±.0005
ANGLES: ±1°
FINISH:
FSCM 83330

DRAWING NUMBER C-17548
REV A
TITLE 3mm BI-LEVEL GANGED ARRAY CBI RoHS COMPLAINT
MATERIAL

Dialight
1501 ROUTE 34 SOUTH
FARMINGDALE, NJ 07727

SHEET 1 OF 1
FAMILY TABLES: