DRAWING NO. SE211915

CATALOG NO.	CONDUCTOR CODE (AWG)	CONDUCTOR NAVY ◁5	BOLT SIZE	FIG. NO.	B ±.04	C ±.04	E ±.02	H REF.	K DIA. ±.02	L ±.06	N ±.03	O.D. ±.01	T REF.	Y MIN.	INSTALLATION TOOLING (# CRIMPS): DIE INDEX	COLOR CODE	MECHANICAL RATCHET: MD7-34R MD6	OUR840	Y8MRB-1 Y2MR ◁6	HYDRAULIC: Y750 Y35, BAT35 Y39, BAT750	Y46 ◁4	Y45 ◁3	DIELESS (# CRIMPS)	WIRE STRIP LENGTH
YAZV10-2TC10	14-10 [2.5mm² STR 4mm² SOL 4mm² STR]	----	#10	1	.69 [18]	.36 [9]	.62 [16]	----	21 [5]	2.04 [52]	.25 [6]	.21 [5]	.06 [2]	.90 [23]	----	----	----	----	----	----	----	----	RATCHET: Y8MRB-1 MR8G98 (2) CRIMPS NON-RATCHET Y10D Y14MV (2) CRIMPS	3/4
YAZV10-2TC10-45				2				.77 [20]		1.91 [49]														
YAZV10-2TC10-90				3				.94 [24]		1.33 [34]														
YAZV10-2TC14			1/4 [M6]	1		.41 [10]	.62 [16]	----	.27 [7]	2.16 [55]	.31 [8]		.05 [1]	.96 [24]										
YAZV10-2TC14-45				2				.77 [20]		2.03 [52]														
YAZV10-2TC14-90				3				.94 [24]		1.45 [37]														
YAZV10-2TC14E2			1/4 [M6]	1			.75 [19]	----		2.28 [58]				1.09 [28]										
YAZV10-2TC14E2-45				2				.77 [20]		2.16 [55]														
YAZV10-2TC14E2-90		----		3	.69 [18]	.41 [10]		.94 [24]	.27 [7]	1.58 [40]	.31 [8]	.21 [5]	.05 [1]		----	----	----	----	----	----	----	----		3/4

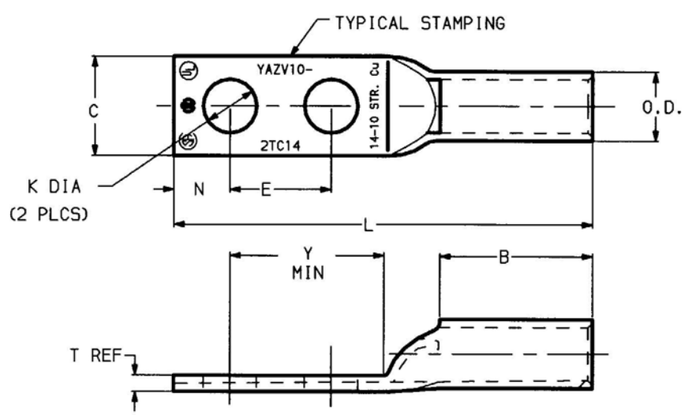

FIG 1

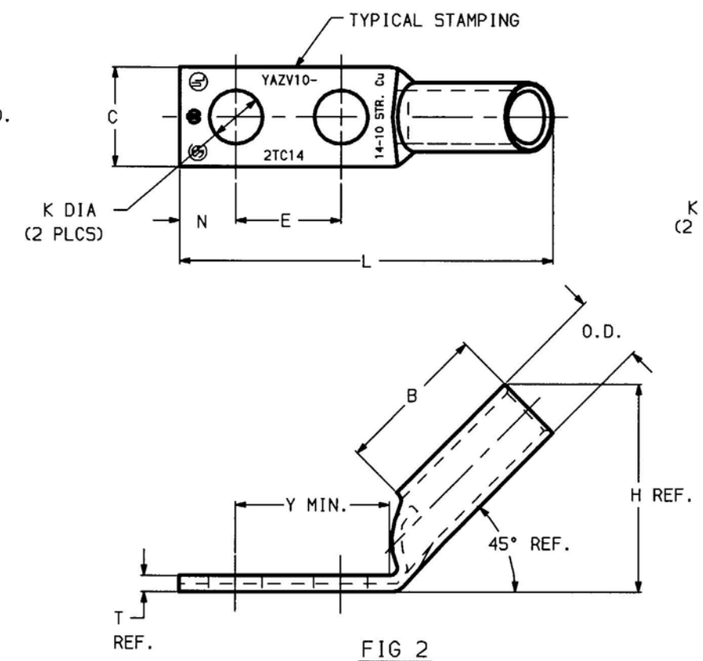

FIG 2

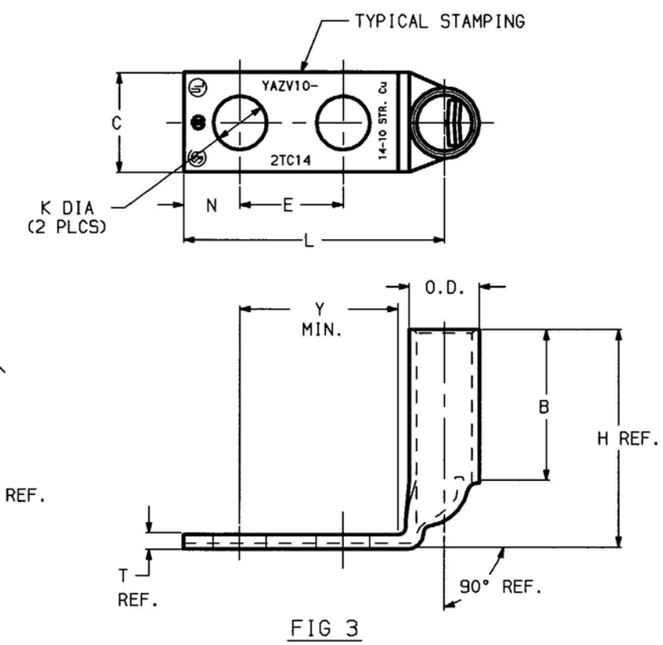

FIG 3

NOTES:

1. MATERIAL: COPPER TUBING.
2. FINISH: TIN PLATED
3. ◁3▷ CATALOG # PT6515 ADAPTOR IS REQUIRED TO USE "U" DIES IN Y45 SERIES TOOLS.
4. ◁4▷ CATALOG # PUADP-1 ADAPTOR IS REQUIRED TO USE "U" DIES IN Y46 SERIES TOOLS.
5. ◁5▷ NAVY CABLE SIZE MAY BE OMITTED ON SOME SIZES BECAUSE OF SPACE LIMITATIONS.
6. ◁6▷ PERMANENT DIE IN TOOLING.
7. DIMENSIONS, METRIC WIRE, & METRIC BOLT SIZES IN BRACKETS [ ] ARE IN MILLIMETERS. DIMENSIONS ARE ROUNDED OFF TO THE NEAREST MILLIMETER, UNLESS OTHEWISE NOTED, AND ARE FOR REFERENCE ONLY.

REV.	DATE	DESCRIPTION	BY	C'K'D.
3	6/04/01	ADD CAT #'S YAZV10-2TC10, -45, -90 TO TABLE PER ECO 6481. BRING CAT.# YAZV10-2TC10 TO TOP OF TABLE.	DB	PL

TO ORDER BURNDY PRODUCTS CALL 1-800-346-4175
MANCHESTER, NH 03109, USA
FOR PRODUCT INFO = http://www.fciconnect.com

HYLUG™ (TWO HOLE CODE)

CAT NO: YAZV10-2TC- (TABLE)

SCALE NTS

DRAWN: D.BOISVERT 11/9/98
CHECKED: K.HENRY 12/03/98
DSGN APPVL: B.MACDONALD 12/02/98
MFG APPVL: N/A
Q.A. APPVL: S.GRAY 11/30/98
MKTG APPVL: N/A
CAD FILE: SE211915-01_3
MDL REF: N/A

FCI BURNDY PRODUCTS

DRAWING NO. SE211915 REV 3

SHEET 1 OF 36

REV. 061995

DRAWING NO. SE211915

CATALOG NO.	CONDUCTOR CODE (AWG)	CONDUCTOR NAVY ⟨5⟩	BOLT SIZE	FIG. NO.	B ±.06	C ±.04	E ±.02	H MAX.	K DIA. ±.02	L ±.09	N ±.04	O.D. ±.01	T REF.	Y MIN.	DIE INDEX	COLOR CODE	MECHANICAL: MD7-34R MD6	MECHANICAL: OUR840	MECHANICAL: Y8MRB-1 Y2MR ⟨6⟩	HYDRAULIC: BCT500 Y500CT	HYDRAULIC: Y750 Y35, BAT35 Y39, BAT750	HYDRAULIC: Y46 ⟨4⟩	HYDRAULIC: Y45 ⟨3⟩	DIELESS (# CRIMPS)	WIRE STRIP LENGTH
					DIMENSIONS										INSTALLATION TOOLING (# CRIMPS)										
YAZ8C-2TC10	#8 AWG [10mm² STR]	23	#10 [M5]	1	.75 [19]	.41 [10]	.62 [16]	----	.21 [5]	2.07 [52]	.25 [6]	.27 [7]	.08 [2]	.90 [23]	49	RED	⟨8⟩	⟨8⟩	RED (2)	⟨8⟩ W8CRT (2)	⟨8⟩ U8CRT (2)	⟨8⟩ U8CRT (2)	⟨8⟩ U8CRT (2)	MECHANICAL: MY29-11 (1)	7/8
YAZ8C-2TC10-45				2				.91 [23]		2.00 [51]															
YAZ8C-2TC10-90				3				1.00 [25]		1.37 [35]							W8CRT (2) W8CVT (2)	X8CRT (2) W8CVT (2)		W8CVT (2)					
YAZ8C-2TC10E2			#10 [M5]	1			.75 [19]	----		2.19 [56]				1.03 [26]											
YAZ8C-2TC10E2-45				2				.91 [23]		2.12 [54]										X8CRT (2)					
YAZ8C-2TC10E2-90	#8 AWG [10mm² STR]	23		3	.75 [19]	.41 [10]		1.00 [25]	.21 [5]	1.50 [38]	.25 [6]	.27 [7]	.08 [2]		49	RED			RED (2)		U8CRT (2)	U8CRT (2)	U8CRT (2)		7/8

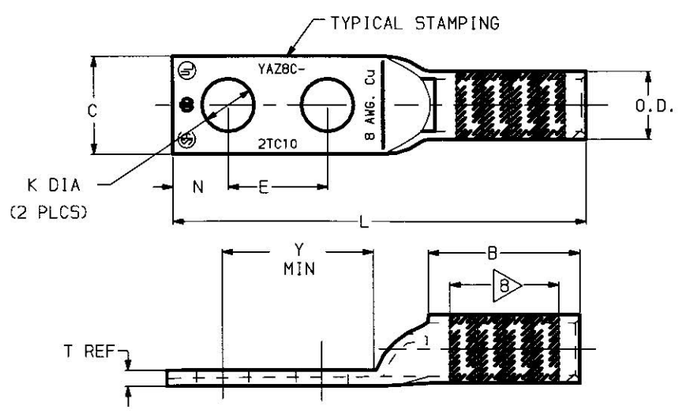

FIG 1

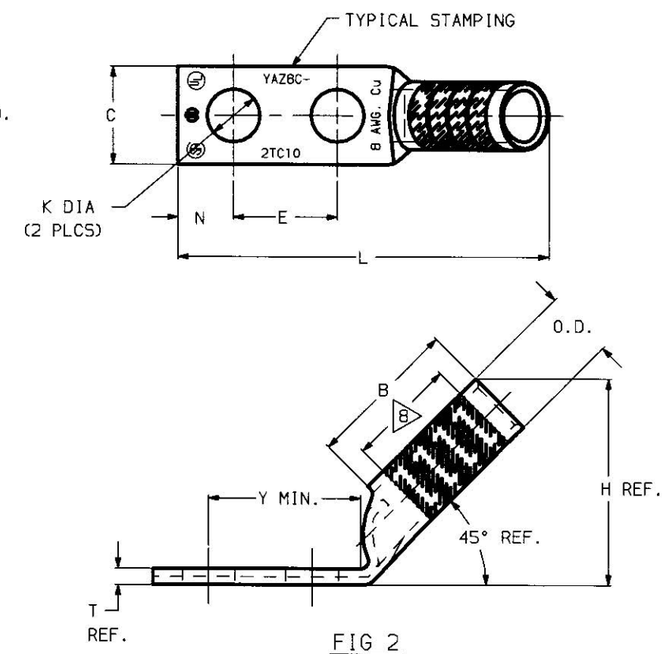

FIG 2

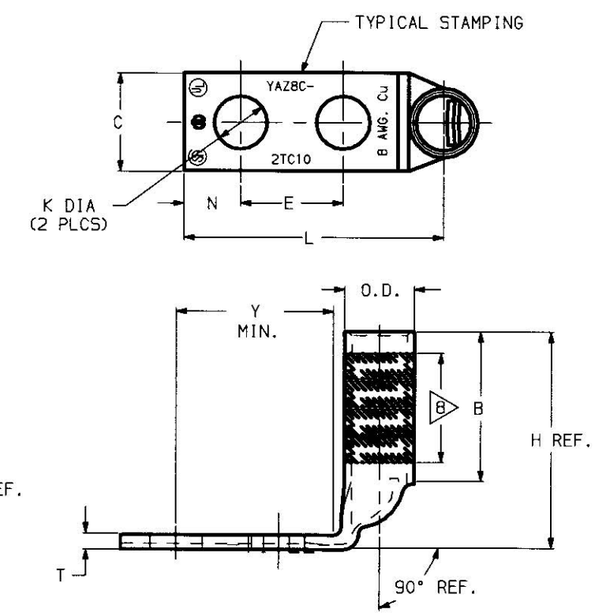

FIG 3

NOTES:

1. MATERIAL: COPPER TUBING.
2. FINISH: TIN PLATED
3. ⟨3⟩ CATALOG # PT6515 ADAPTOR IS REQUIRED TO USE "U" DIES IN Y45 SERIES TOOLS.
4. ⟨4⟩ CATALOG # PUADP-1 ADAPTOR IS REQUIRED TO USE "U" DIES IN Y46 SERIES TOOLS.
5. ⟨5⟩ NAVY CABLE SIZE MAY BE OMITTED ON SOME SIZES BECAUSE OF SPACE LIMITATIONS.
6. ⟨6⟩ PERMANENT DIE IN TOOLING.
7. DIMENSIONS, METRIC WIRE, & METRIC BOLT SIZES IN BRACKETS [ ] ARE IN MILLIMETERS. DIMENSIONS ARE ROUNDED OFF TO THE NEAREST MILLIMETER, UNLESS OTHEWISE NOTED, AND ARE FOR REFERENCE ONLY.
8. ⟨8⟩ OVERLAP 2 CRIMPS AS NEEDED WITHIN THE LENGTH BETWEEN THE INK STAMPED CRIMPING AREA.

REV.	DATE	DESCRIPTION	BY	C'K'D.
1	8/22/00	CHANGED B, H & L DIMS PER ECO 5912	BM	JLM
0	11/10/98	RELEASED PER ECO 4612.	DB	KH

TO ORDER BURNDY PRODUCTS CALL 1-800-346-4175
MANCHESTER, NH 03109, USA
FOR PRODUCT INFO = http://www.fciconnect.com

HYLUG™ (TWO HOLE CODE)

CAT NO: YAZ8C-2TC- (SEE TABLE) SCALE FULL SIZE

DRAWN: D. BOISVERT 11/10/98
CHECKED: K. HENRY 12/03/98
DSGN APPVL: B. MACDONALD 12/02/98
MFG APPVL: N/A
Q.A. APPVL: S. GRAY 11/30/98
MKTG APPVL: B. HARGROVE 11/25/98
CAD FILE: SE211915-02_1
MDL REF: N/A

FCI FRAMATOME GROUP
BURNDY . RACINE . MALICO . SAAE Products

DRAWING NO. SE211915 REV 1
SHEET 2 OF 36

REV. 061995

DRAWING NO. SE211915

CATALOG NO.	CONDUCTOR CODE (AWG)	CONDUCTOR NAVY ◁5	BOLT SIZE	FIG. NO.	DIMENSIONS B ±.06	C ±.04	E ±.02	H MAX.	K DIA. ±.02	L ±.09	N ±.04	O.D. ±.01	T REF.	Y MIN.	INSTALLATION TOOLING (# CRIMPS) DIE INDEX	COLOR CODE	MECHANICAL MD7-34R MD6	MECHANICAL OUR840	MECHANICAL Y8MRB-1 Y2MR ◁6	HYDRAULIC BCT500 Y500CT	HYDRAULIC Y750 Y35, BAT35 Y39, BAT750	HYDRAULIC Y46 ◁4	HYDRAULIC Y45 ◁3	DIELESS (# CRIMPS)	WIRE STRIP LENGTH
YAZ8C-2TC14	#8 AWG [10mm² STR]	23	1/4 [M6]	1	.75 [19]	.44 [11]	.62 [16]	----	.27 [7]	2.19 [56]	.31 [8]	.27 [7]	.08 [2]	.96 [24]	49	RED	▽8 W8CRT (2) W8CVT (2)	▽8 X8CRT (2) W8CVT (2)	RED (2)	▽8 W8CRT (2) W8CVT (2) X8CRT (2)	▷8 U8CRT (2)	▽8 U8CRT (2)	▽8 U8CRT (2)	MECHANICAL: MY29-11 (1)	7/8
YAZ8C-2TC14-45				2				.90 [23]		2.11 [54]															
YAZ8C-2TC14-90				3				1.00 [25]		1.49 [38]															
YAZ8C-2TC14E2			1/4 [M6]	1			.75 [19]	----		2.32 [59]				1.09 [28]											
YAZ8C-2TC14E2-45				2				.90 [23]	.27 [7]	2.24 [57]	.31 [8]	.27 [7]	.08 [2]												
YAZ8C-2TC14E2-90	#8 AWG [10mm² STR]	23		3	.75 [19]	.44 [11]		1.00 [25]		1.62 [41]					49	RED			RED (2)		U8CRT (2)	U8CRT (2)	U8CRT (2)		7/8

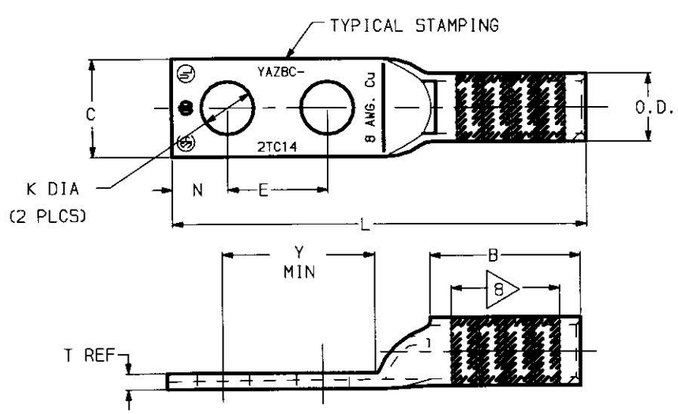

FIG 1

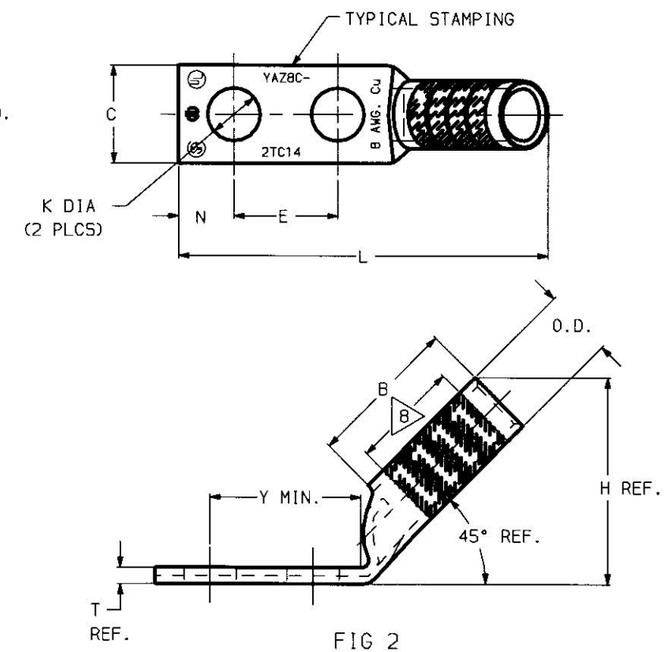

FIG 2

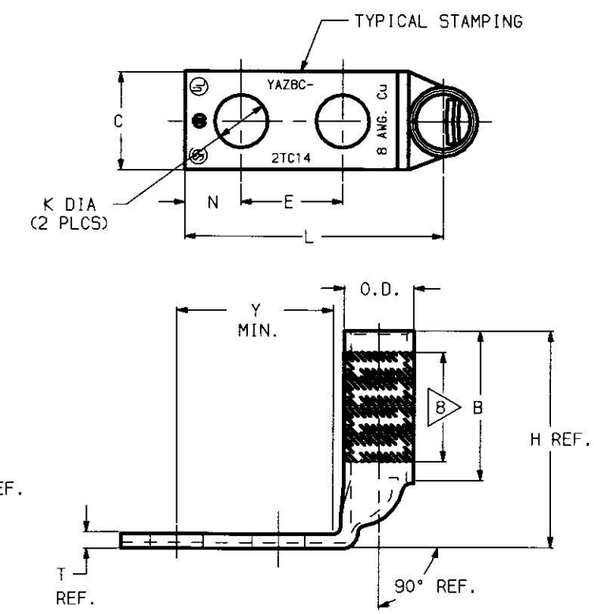

FIG 3

NOTES:

1. MATERIAL: COPPER TUBING.
2. FINISH: TIN PLATED
3. ▷3 CATALOG # PT6515 ADAPTOR IS REQUIRED TO USE "U" DIES IN Y45 SERIES TOOLS.
4. ▷4 CATALOG # PUADP-1 ADAPTOR IS REQUIRED TO USE "U" DIES IN Y46 SERIES TOOLS.
5. ▷5 NAVY CABLE SIZE MAY BE OMITTED ON SOME SIZES BECAUSE OF SPACE LIMITATIONS.
6. ▷6 PERMANENT DIE IN TOOLING.
7. DIMENSIONS, METRIC WIRE, & METRIC BOLT SIZES IN BRACKETS [ ] ARE IN MILLIMETERS. DIMENSIONS ARE ROUNDED OFF TO THE NEAREST MILLIMETER, UNLESS OTHEWISE NOTED, AND ARE FOR REFERENCE ONLY.
8. ▷8 OVERLAP 2 CRIMPS AS NEEDED WITHIN THE LENGTH BETWEEN THE INK STAMPED CRIMPING AREA.

REV.	DATE	DESCRIPTION	BY	C'K'D.
1	8/22/00	· CHANGED B,H,AND L DIMS PER ECO 5912	BM	JLM
0	11/11/98	· RELEASED PER ECO 4612.	DB	KH

TO ORDER BURNDY PRODUCTS CALL 1-800-346-4175
MANCHESTER, NH 03109, USA
FOR PRODUCT INFO = http://www.fciconnect.com

HYLUG™ (TWO HOLE CODE)

CAT NO: YAZ8C-2TC- (TABLE) — SCALE NTS

DRAWN: D.BOISVERT 11/9/98 — CHECKED: K.HENRY 12/03/98
DSGN APPVL: B.MACDONALD 12/02/98 — MFG APPVL: N/A
Q.A. APPVL: S.GRAY 11/30/98
MKTG APPVL: N/A
CAD FILE: SE211915-03_1
MDL REF: N/A

FCI BURNDY PRODUCTS

DRAWING NO. SE211915 — REV 1
SHEET 3 OF 36

REV: 061995

DRAWING NO.
SE211915

CATALOG NO.	CONDUCTOR CODE (AWG)	CONDUCTOR NAVY 5	BOLT SIZE	FIG. NO.	B ±.06	C ±.04	E ±.02	H MAX.	K DIA. ±.02	L ±.09	N ±.04	O.D. ±.01	T REF.	Y MIN.	DIE INDEX	COLOR CODE	MECHANICAL MD7-34R MD6	MECHANICAL OUR840	MECHANICAL Y8MRB-1 Y2MR 6	HYDRAULIC PAT600 BCT500 Y500CT 8	HYDRAULIC Y750, PAT750 Y35, BAT35 Y39, BAT750 9	HYDRAULIC Y46 PAT46 4	HYDRAULIC Y45 3	DIELESS (# CRIMPS)	WIRE STRIP LENGTH
															INSTALLATION TOOLING (# CRIMPS)										
YAZ8C-2TC14E10	#8 AWG [10mm² STR]	23	1/4 [M6]	1	.75 [19]	.44 [11]	1.25 [32]	----	.27 [7]	2.82 [72]	.31 [8]	.27 [7]	.08 [2]	1.58 [40]	49	RED	8 W8CRT W8CVT (2)	8 X8CRT W8CVT (2)	RED (2)	8 X8CRT W8CVT W8CRT (2)	8 U8CRT (2)	8 U8CRT (2)	8 U8CRT (2)	MECHANICAL: MY29-11 (1)	7/8
YAZ8C-2TC14E10-45				2				.90 [23]		2.74 [70]															
YAZ8C-2TC14E10-90				3				1.00 [25]		2.12 [54]															
YAZ8C-2TC14E1			1/4 [M6]	1		.44 [11]	1.00 [25]	----	.27 [7]	2.57 [65]	.31 [8]		.08 [2]	1.34 [34]											
YAZ8C-2TC14E1-45				2				.90 [23]		2.49 [63]															
YAZ8C-2TC14E1-90				3				1.00 [25]		1.87 [47]															
YAZ8C-2TC38			3/8 [M10]	1		.58 [15]	1.00 [25]	----	.40 [10]	2.76 [70]	.41 [10]		.06 [2]	1.43 [36]											
YAZ8C-2TC38-45				2				.90 [23]		2.63 [67]															
YAZ8C-2TC38-90	#8 AWG [10mm² STR]	23		3	.75 [19]			1.00 [25]		2.05 [52]					49	RED	W8CRT W8CVT (2)	X8CRT W8CVT (2)	RED (2)	X8CRT W8CVT W8CRT (2)	U8CRT (2)	U8CRT (2)	U8CRT (2)		7/8

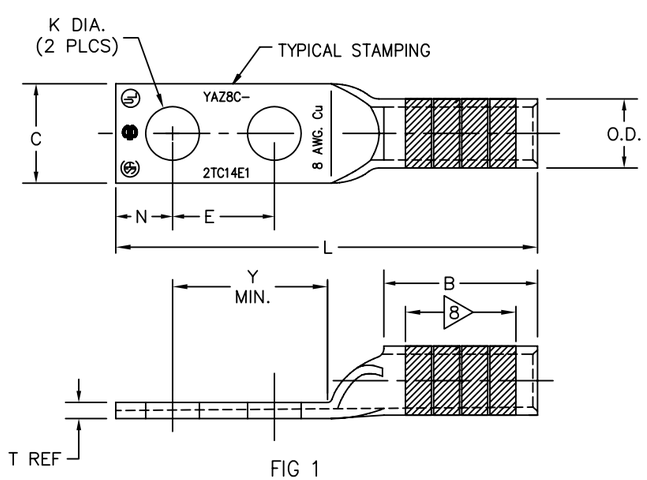

FIG 1

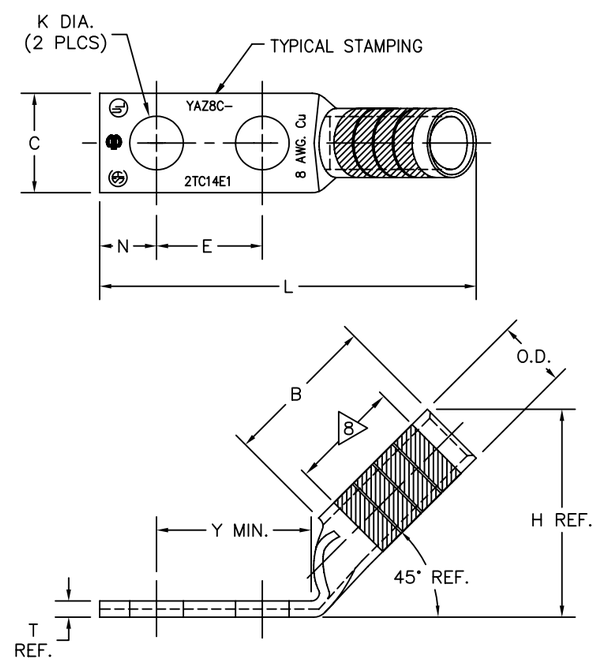

FIG 2

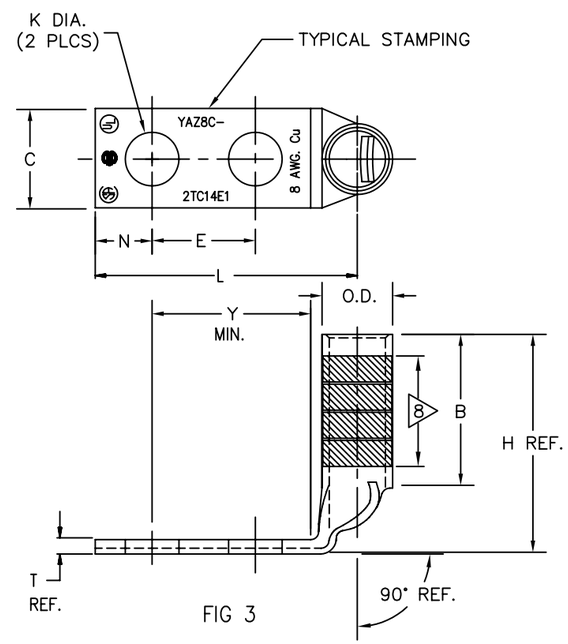

FIG 3

NOTES:

1. MATERIAL: COPPER TUBING.
2. FINISH: TIN PLATED
3. CATALOG # PT6515 ADAPTOR IS REQUIRED TO USE "U" DIES IN Y45 SERIES TOOLS.
4. CATALOG # PUADP-1 ADAPTOR IS REQUIRED TO USE "U" DIES IN Y46 SERIES TOOLS.
5. NAVY CABLE SIZE MAY BE OMITTED ON SOME SIZES BECAUSE OF SPACE LIMITATIONS.
6. PERMANENT DIE IN TOOLING.
7. DIMENSIONS, METRIC WIRE, & METRIC BOLT SIZES IN BRACKETS [ ] ARE IN MILLIMETERS. DIMENSIONS ARE ROUNDED OFF TO THE NEAREST MILLIMETER, UNLESS OTHEWISE NOTED, AND ARE FOR REFERENCE ONLY.
8. OVERLAP 2 CRIMPS AS NEEDED WITHIN THE LENGTH BETWEEN THE INK STAMPED CRIMPING AREA.

REV.	DATE	DESCRIPTION	ECO	BY	C'K'D.
A	01/09/08	ADD CAT. NO. YAZ8C-2TC14E10, -45, -90 TO TABLE.	15430	RB	PL

TO ORDER BURNDY® PRODUCTS CALL 1-800-346-4175
MANCHESTER, NH 03109, USA
FOR PRODUCT INFO = http://www.fciconnect.com

HYLUG™ (TWO HOLE CODE)

ITEM NO: N/A

CAT NO: YAZ8C-2TC- (SEE TABLE)

SCALE:	NTS	
DRAWN BY:	R.BOISVERT	11/11/98
CHECKER:	K.HENRY	12/03/98
DSN APPVL:	B.MACDONALD	12/02/98
MFG APPVL:	N/A	--
QC APPVL:	S.GRAY	11/30/98
MKT APPVL:	B.HARDGROVE	11/25/98
PROD FAM:	--	
PROJECT #:	--	
DOCUMENT TYPE:	Sales	
REL LEVEL:	AutoCAD	

FCI BURNDY PRODUCTS

SIZE	DRAWING NO	REV
D	SE211915	A
	SHEET 4 OF 36	

SE211915

CATALOG NO.	CONDUCTOR CODE (AWG)	CONDUCTOR NAVY ◁5	BOLT SIZE	FIG. NO.	DIMENSIONS B ±.03	C +.04 −.02	E ±.02	H REF.	K DIA. ±.02	L ±.06	N ±.04	O.D. ±.01	T REF.	Y MIN.	INSTALLATION TOOLING (# CRIMPS) DIE INDEX	COLOR CODE	MECHANICAL RATCHET MD7-34R MD6	MECHANICAL RATCHET OUR840	MECHANICAL RATCHET Y2MR ◁6	HYDRAULIC Y34A ◁8	HYDRAULIC Y750 Y35, BAT35 Y39, BAT750	HYDRAULIC Y46 ◁4	HYDRAULIC Y45 ◁3	DIELESS (# CRIMPS)	WIRE STRIP LENGTH
YAZ6C-2TC14	#6 AWG [----]	30	1/4 [M6]	1	1.12 [28]	.45 [11]	.62 [16]	----	.27 [7]	2.65 [67]	.31 [8]	.29 [7]	.08 [2]	.96 [24]	7 OR 374	BLUE	W5CVT W5CRT (2)	W5CVT W5CRT (2)	BLUE (2)	A5CR (2)	U5CRT U8CABT (2)	U5CRT U8CABT (2)	U5CRT U8CABT (2)	MECHANICAL: MY29-11 (1) HYDRAULIC: Y644, Y644M Y644MBH, Y1000 Y1000BH 1 CRIMP	1-3/16
YAZ6C-2TC14-45				2				1.19 [30]		2.45 [62]															
YAZ6C-2TC14-90				3				1.50 [38]		1.51 [38]															
YAZ6C-2TC10E2			#10 [M5]	1		.42 [11]	.75 [19]	----	.21 [5]	2.65 [67]	.25 [6]		.09 [2]	1.03 [26]											
YAZ6C-2TC10E2-45				2				1.19 [30]		2.48 [63]															
YAZ6C-2TC10E2-90	#6 AWG [----]	30		3	1.12 [28]			1.52 [39]		1.51 [38]					7 OR 374	BLUE			BLUE (2)	A5CR (2)	U5CRT U8CABT (2)	U5CRT U8CABT (2)	U5CRT U8CABT (2)		1-3/16

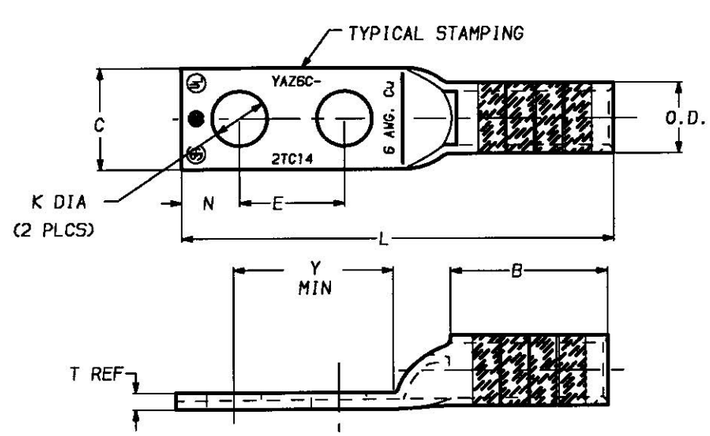

FIG 1

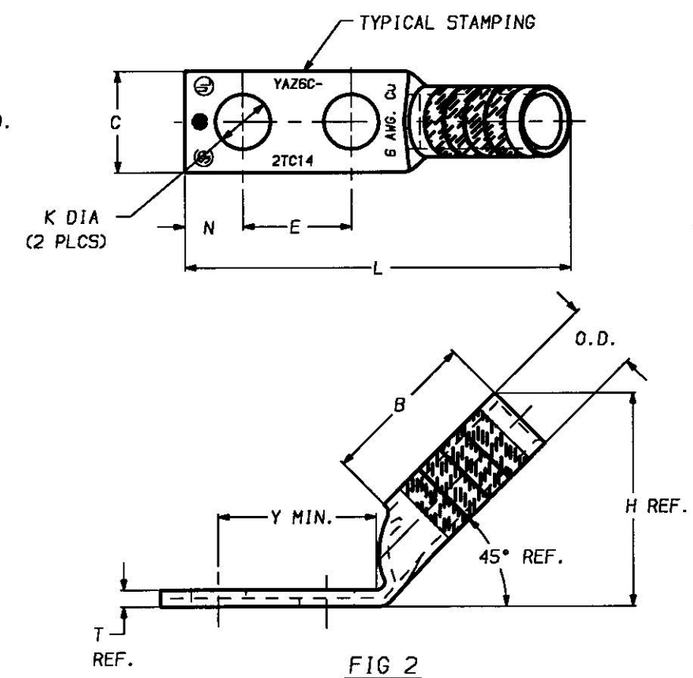

FIG 2

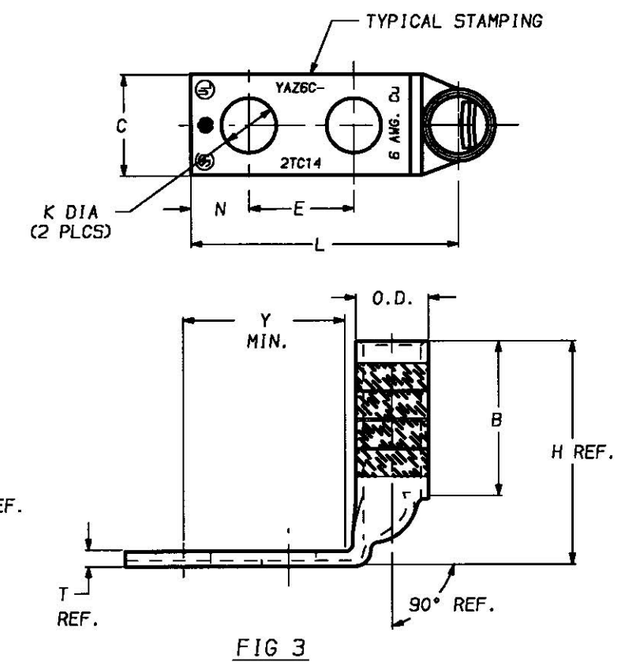

FIG 3

NOTES:

1. MATERIAL: COPPER TUBING.
2. FINISH: TIN PLATED
3. ◁3▷ CATALOG # PT6515 ADAPTOR IS REQUIRED TO USE "U" DIES IN Y45 SERIES TOOLS.
4. ◁4▷ CATALOG # PUADP-1 ADAPTOR IS REQUIRED TO USE "U" DIES IN Y46 SERIES TOOLS.
5. ◁5▷ NAVY CABLE SIZE MAY BE OMITTED ON SOME SIZES BECAUSE OF SPACE LIMITATIONS.
6. ◁6▷ PERMANENT DIE IN TOOLING.
7. DIMENSIONS, METRIC WIRE, & METRIC BOLT SIZES IN BRACKETS [ ] ARE IN MILLIMETERS. DIMENSIONS ARE ROUNDED OFF TO THE NEAREST MILLIMETER, UNLESS OTHEWISE NOTED, AND ARE FOR REFERENCE ONLY.
8. ◁8▷ FOR USE BY CUSTOMERS THAT HAVE THIS HYPRESS.™ NO NEW Y34A HYPRESS™ ARE BEING PROCESSED.

REV.	DATE	DESCRIPTION	BY	C'K'D.
0	11/11/98	RELEASED PER ECO 4612.	DB	KH

HYLUG™

CAT NO. YAZ6C-2TC- (SEE TABLE) — SCALE NTS

DRAWN: D. BOISVERT 11/11/98 — CHECKED: K. HENRY 12/03/98

DSGN APPVL: B. MACDONALD 12/02/98 — MFG APPVL: N/A

Q.A. APPVL: S. GRAY 11/30/98 — MKTG APPVL: B. HARGROVE 11/25/98

CAD FILE: SE211915-05_0 — PM REF: N/A

MDL REF: N/A

PROJECT: .

FCI BURNDY PRODUCTS

DRAWING NO. SE211915 — REV 0

SHEET 5 OF 36

REV. 061995

DRAWING NO. SE211915

CATALOG NO.	CONDUCTOR CODE (AWG)	CONDUCTOR NAVY ◁5	BOLT SIZE	FIG. NO.	DIMENSIONS B ±.03	C +.04 −.02	E ±.02	H REF.	K DIA. ±.02	L ±.06	N ±.04	O.D. ±.01	T REF.	Y MIN.	INSTALLATION TOOLING (# CRIMPS) DIE INDEX	COLOR CODE	MECHANICAL MD7–34R MD6	OUR840	Y2MR ◁6	HYDRAULIC Y34A ◁8	Y750 Y35, BAT35 Y39, BAT750	Y46 ◁4	Y45 ◁3	DIELESS (# CRIMPS)	WIRE STRIP LENGTH
YAZ6C–2TC14E2	#6 AWG	30	1/4 [M6]	1	1.12 [28]	.45 [11]	.75 [19]	----	.27 [7]	2.78 [71]	.31 [8]	.29 [7]	.08 [2]	1.09 [28]	7 OR 374	BLUE	W5CVT W5CRT (2)	W5CVT W5CRT (2)	BLUE (2)	A5CR (2)	U5CRT U8CABT (2)	U5CRT U8CABT (2)	U5CRT U8CABT (2)	MECHANICAL: MY29–11 (1) HYDRAULIC: Y644, Y644M Y644MBH, Y1000 Y1000BH 1 CRIMP	1–3/16
YAZ6C–2TC14E2–45				2				1.19 [30]		2.58 [66]															
YAZ6C–2TC14E2–90				3				1.50 [38]		1.63 [41]															
YAZ6C–2TC14E1			1/4 [M6]	1			1.00 [25]	----		3.03 [77]			.08 [2]	1.34 [34]											
YAZ6C–2TC14E1–45				2				1.19 [30]		2.83 [72]															
YAZ6C–2TC14E1–90				3				1.50 [38]		1.88 [48]															
YAZ6C–2TC14E9			1/4 [M6]	1			.50 [13]	----		2.53 [64]			.08 [2]	.84 [21]											
YAZ6C–2TC14E9–45				2	1.12 [28]	.45 [11]		1.19 [30]	.27 [7]	2.33 [59]	.31 [8]	.29 [7]			7 OR 374	BLUE	W5CVT W5CRT (2)	W5CVT W5CRT (2)	BLUE (2)	A5CR (2)	U5CRT U8CABT (2)	U5CRT U8CABT (2)	U5CRT U8CABT (2)		
YAZ6C–2TC14E9–90	#6 AWG	30		3				1.50 [38]		1.38 [35]															1–3/16

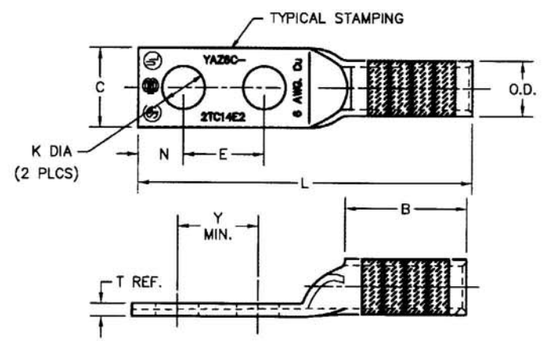

FIG 1

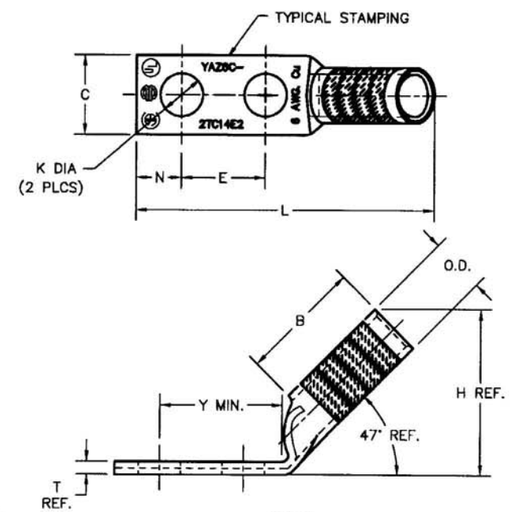

FIG 2

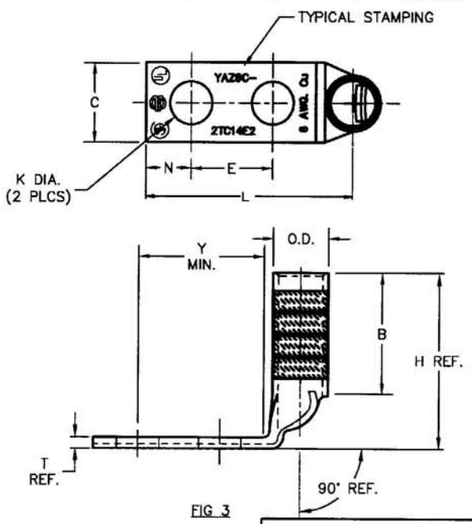

FIG 3

NOTES:

1. MATERIAL: COPPER TUBING.
2. FINISH: TIN PLATED
3. CATALOG # PT6515 ADAPTOR IS REQUIRED TO USE "U" DIES IN Y45 SERIES TOOLS.
4. CATALOG # PUADP–1 ADAPTOR IS REQUIRED TO USE "U" DIES IN Y46 SERIES TOOLS.
5. NAVY CABLE SIZE MAY BE OMITTED ON SOME SIZES BECAUSE OF SPACE LIMITATIONS.
6. PERMANENT DIE IN TOOLING.
7. DIMENSIONS, METRIC WIRE, & METRIC BOLT SIZES IN BRACKETS [ ] ARE IN MILLIMETERS. DIMENSIONS ARE ROUNDED OFF TO THE NEAREST MILLIMETER, UNLESS OTHEWISE NOTED, AND ARE FOR REFERENCE ONLY.
8. FOR USE BY CUSTOMERS THAT HAVE THIS HYPRESS.™ NO NEW Y34A HYPRESS ™ ARE BEING PROCESSED.

REV.	DATE	DESCRIPTION	ECO	BY	C'K'D
A	8/23/02	UPDATE FORMAT & ADD CAT. NO'S TO TABLE.	7870	DB	PL

TO ORDER BURNDY PRODUCTS CALL 1–800–346–4175
MANCHESTER, NH 03109, USA
FOR PRODUCT INFO = http://www.fciconnect.com

HYLUG™

ITEM NO: N/A

CAT NO: YAZ6C–2TC– (TABLE)

SCALE: NTS		
DRAWN BY: D.BOISVERT	11/11/98	
CHECKER: K.HENRY	12/03/98	
DSN APPVL: B.MACDONALD	12/02/98	
MFG APPVL: N/A	—	
QC APPVL: S.GRAY	11/30/98	
MKT APPVL: B.HARDGROVE	11/25/98	
PROD FAM: —		
PROJECT #: —		
DOCUMENT TYPE: Sales		
REL LEVEL: AutoCAD		

FCI

SIZE D

DRAWING NO SE211915 REV A

SHEET 6 OF 36

SE211915

CATALOG NO.	CONDUCTOR CODE (AWG)	CONDUCTOR NAVY ◁5	BOLT SIZE	FIG. NO.	DIMENSIONS B ±.03	C +.04 -.02	E ±.02	H REF.	K DIA. ±.02	L ±.06	N ±.04	O.D. ±.01	T REF.	Y MIN.	INSTALLATION TOOLING (# CRIMPS) DIE INDEX	COLOR CODE	MECHANICAL RATCHET MD7-34R MD6	OUR840	Y2MR ◁6	HYDRAULIC Y34A ◁8	Y750 Y35, BAT35 Y39, BAT750	Y46 ◁4	Y45 ◁3	DIELESS (# CRIMPS)	WIRE STRIP LENGTH
YAZ6C-2TC38E2	#6 AWG [----]	30	3/8 [M10]	1	1.12 [28]	.58 [15]	.75 [19]	----	.40 [10]	2.97 [75]	.41 [10]	.29 [7]	.06 [2]	1.18 [30]	7 OR 374	BLUE	W5CVT W5CRT (2)	W5CVT W5CRT (2)	BLUE (2)	A5CR (2)	U5CRT U8CABT (2)	U5CRT U8CABT (2)	U5CRT U8CABT (2)	MECHANICAL: MY29-11 (1)	1-3/16
YAZ6C-2TC38E2-45				2				1.18 [30]		2.72 [69]															
YAZ6C-2TC38E2-90				3				1.46 [37]		1.81 [46]														HYDRAULIC: Y644, Y644M Y644MBH, Y1000 Y1000BH 1 CRIMP	
YAZ6C-2TC38E6			3/8 [M10]	1			.88 [22]	----		3.09 [78]				1.31 [33]											
YAZ6C-2TC38E6-45				2				1.18 [30]		2.85 [72]															
YAZ6C-2TC38E6-90	#6 AWG [----]	30		3	1.12 [28]	.58 [15]		1.46 [37]	.40 [10]	1.94 [49]	.41 [10]	.29 [7]	.06 [2]		7 OR 374	BLUE			BLUE (2)	A5CR (2)	U5CRT U8CABT (2)	U5CRT U8CABT (2)	U5CRT U8CABT (2)		1-3/16

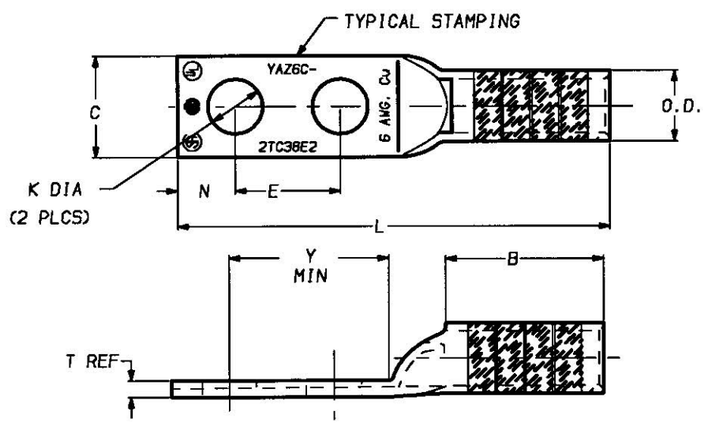

FIG 1

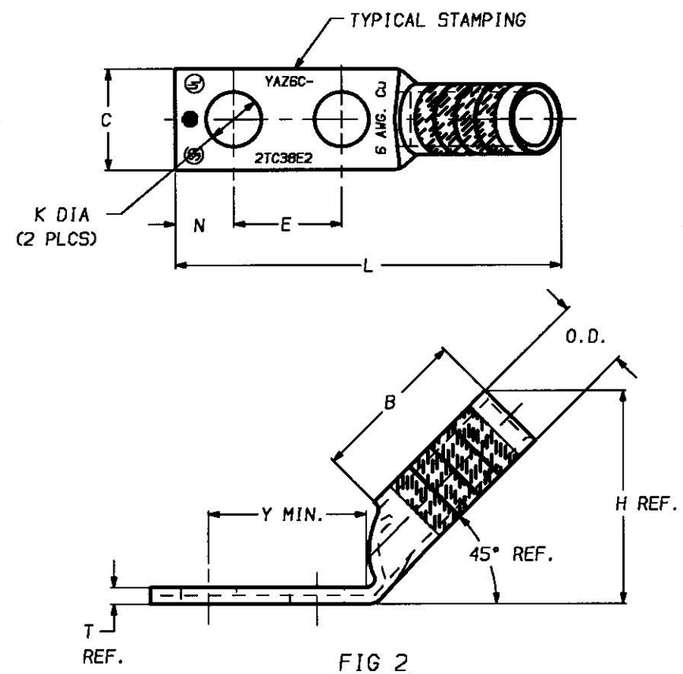

FIG 2

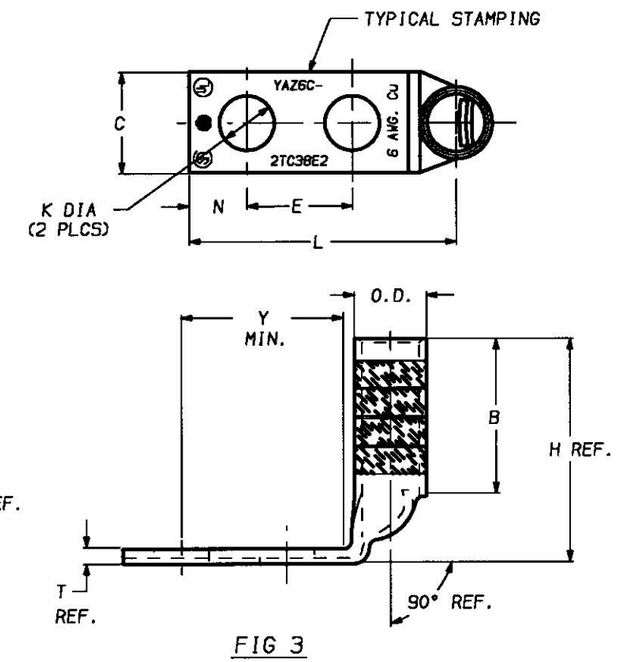

FIG 3

NOTES:

1. MATERIAL: COPPER TUBING.
2. FINISH: TIN PLATED
3. ◁3▷ CATALOG # PT6515 ADAPTOR IS REQUIRED TO USE "U" DIES IN Y45 SERIES TOOLS.
4. ◁4▷ CATALOG # PUADP-1 ADAPTOR IS REQUIRED TO USE "U" DIES IN Y46 SERIES TOOLS.
5. ◁5▷ NAVY CABLE SIZE MAY BE OMITTED ON SOME SIZES BECAUSE OF SPACE LIMITATIONS.
6. ◁6▷ PERMANENT DIE IN TOOLING.
7. DIMENSIONS, METRIC WIRE, & METRIC BOLT SIZES IN BRACKETS [ ] ARE IN MILLIMETERS. DIMENSIONS ARE ROUNDED OFF TO THE NEAREST MILLIMETER, UNLESS OTHEWISE NOTED, AND ARE FOR REFERENCE ONLY.
8. ◁8▷ FOR USE BY CUSTOMERS THAT HAVE THIS HYPRESS.™ NO NEW Y34A HYPRESS™ ARE BEING PROCESSED.

REV.	DATE	DESCRIPTION	BY	C'K'D.
0	11/11/98	RELEASED PER ECO 4612.	DB	KH

HYLUG™

CAT NO. YAZ6C-2TC- (SEE TABLE) — SCALE NTS

DRAWN: D. BOISVERT 11/11/98 — CHECKED: K. HENRY 12/03/98

DSGN APPVL: B. MACDONALD 12/02/98 — MFG APPVL: N/A

Q.A. APPVL: S. GRAY 11/30/98 — MKTG APPVL: B. HARGROVE 11/25/98

CAD FILE: SE211915-07_0 — PM REF: N/A

MDL REF: N/A

PROJECT: .

FRAMATOME CONNECTORS USA INC.
BURNDY ELECTRICAL
MANCHESTER, NH 03108
U. S. A.
1-800-346-4175

DRAWING NO. SE211915 — REV 0

SHEET 7 OF 36

REV. 061995

SE211915

CATALOG NO.	CONDUCTOR CODE (AWG)	CONDUCTOR NAVY ◁5	BOLT SIZE	FIG. NO.	DIMENSIONS B ±.03	C +.04 -.02	E ±.02	H REF.	K DIA. ±.02	L ±.06	N ±.04	O.D. ±.01	T REF.	Y MIN.	INSTALLATION TOOLING (# CRIMPS) DIE INDEX	COLOR CODE	MECHANICAL RATCHET MD7-34R MD6	OUR840	Y2MR ◁6	HYDRAULIC Y34A ◁8	Y750 Y35, BAT35 Y39, BAT750	Y46 ◁4	Y45 ◁3	DIELESS (# CRIMPS)	WIRE STRIP LENGTH
YAZ6C-2TC38	#6 AWG [----]	30	3/8 [M10]	1	1.12 [28]	.58 [15]	1.00 [25]	----	.40 [10]	3.22 [82]	.41 [10]	.29 [7]	.06 [2]	1.43 [36]	7 OR 374	BLUE	W5CVT W5CRT (2)	W5CVT W5CRT (2)	BLUE (2)	A5CR (2)	U5CRT U8CABT (2)	U5CRT U8CABT (2)	U5CRT U8CABT (2)	MECHANICAL: MY29-11 (1) HYDRAULIC: Y644, Y644M Y644MBH, Y1000 Y1000BH 1 CRIMP	1-3/16
YAZ6C-2TC38-45				2				1.18 [30]		2.97 [75]															
YAZ6C-2TC38-90				3				1.46 [37]		2.06 [52]															

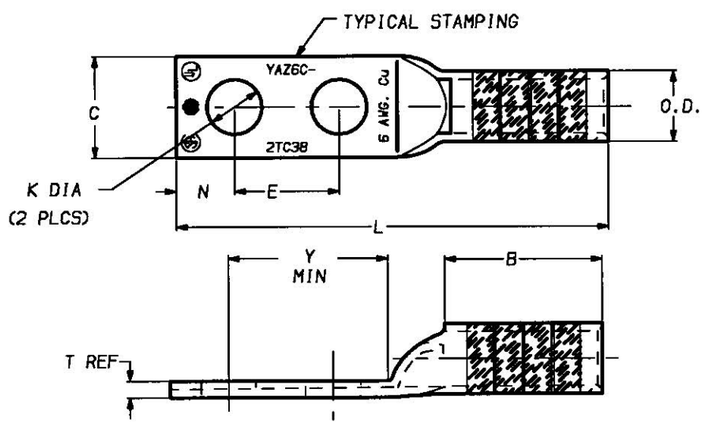

FIG 1

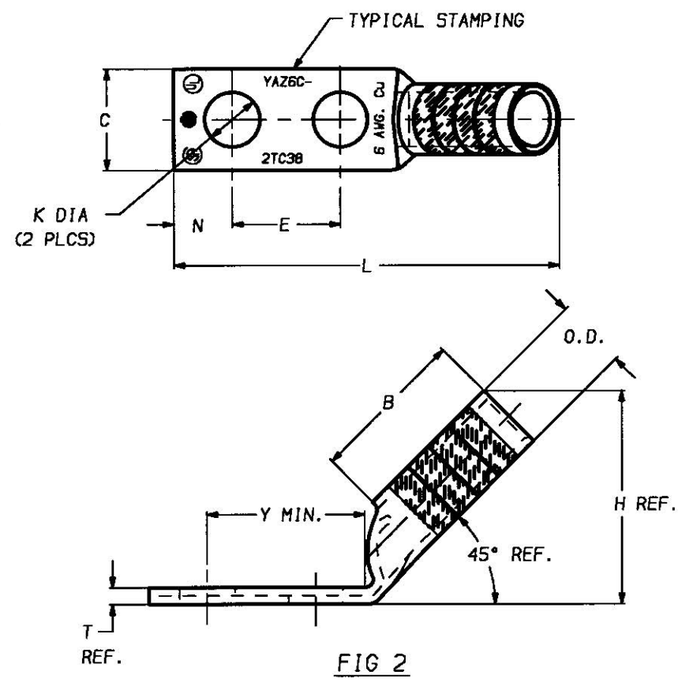

FIG 2

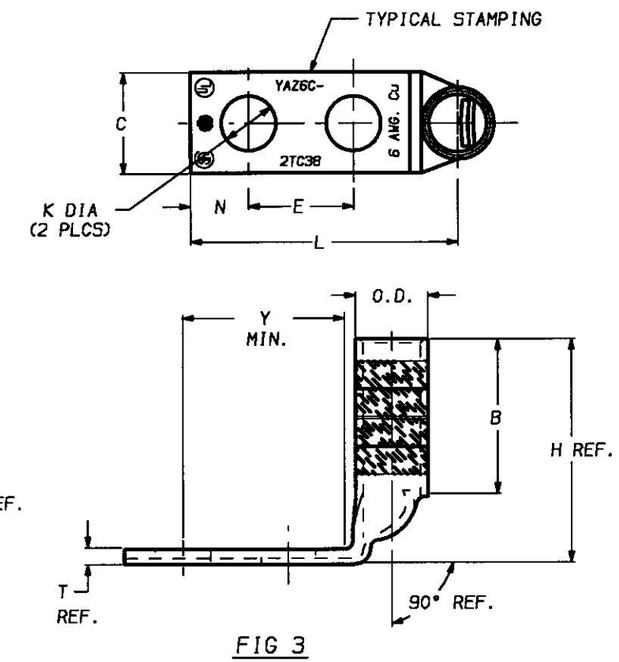

FIG 3

NOTES:

1. MATERIAL: COPPER TUBING.
2. FINISH: TIN PLATED
3. ▷ CATALOG # PT6515 ADAPTOR IS REQUIRED TO USE "U" DIES IN Y45 SERIES TOOLS.
4. ▷ CATALOG # PUADP-1 ADAPTOR IS REQUIRED TO USE "U" DIES IN Y46 SERIES TOOLS.
5. ▷ NAVY CABLE SIZE MAY BE OMITTED ON SOME SIZES BECAUSE OF SPACE LIMITATIONS.
6. ▷ PERMANENT DIE IN TOOLING.
7. DIMENSIONS, METRIC WIRE, & METRIC BOLT SIZES IN BRACKETS [ ] ARE IN MILLIMETERS. DIMENSIONS ARE ROUNDED OFF TO THE NEAREST MILLIMETER, UNLESS OTHEWISE NOTED, AND ARE FOR REFERENCE ONLY.
8. ▷ FOR USE BY CUSTOMERS THAT HAVE THIS HYPRESS.™ NO NEW Y34A HYPRESS™ ARE BEING PROCESSED.

REV.	DATE	DESCRIPTION	BY	C'K'D.
0	11/11/98	RELEASED PER ECO 4612.	DB	KH

HYLUG™

CAT NO. YAZ6C-2TC- (SEE TABLE) — SCALE NTS

DRAWN: D. BOISVERT 11/11/98 — CHECKED: K. HENRY 12/03/98

DSGN APPVL: B. MACDONALD 12/02/98 — MFG APPVL: N/A

Q.A. APPVL: S. GRAY 11/30/98 — MKTG APPVL: B. HARGROVE 11/25/98

CAD FILE: SE211915-08_0 — PM REF: N/A

MDL REF: N/A

PROJECT: .

FRAMATOME CONNECTORS USA INC.
BURNDY ELECTRICAL
MANCHESTER, NH 03108
U. S. A.
1-800-346-4175

DRAWING NO. SE211915 — REV 0

SHEET 8 OF 36

REV. 061995

DRAWING NO.
SE211915

CATALOG NO.	CONDUCTOR CODE (AWG)	CONDUCTOR NAVY 5	BOLT SIZE	FIG. NO.	B ±.06	C ±.04	E ±.02	H REF.	K DIA. ±.02	L ±.09	N ±.04	O.D. ±.01	T REF.	Y MIN.	DIE INDEX	COLOR CODE	MECHANICAL: MD7-34R MD6	MECHANICAL: OUR840 BCT500 9	MECHANICAL: Y2MR 6	HYDRAULIC: Y34A 8	HYDRAULIC: Y750 Y35, BAT35 Y39, BAT750 9	HYDRAULIC: Y46 4	HYDRAULIC: Y45 3	DIELESS (# CRIMPS)	WIRE STRIP LENGTH
YAZ4C-2TC10E2	#4 AWG [----]	40	#10 [M5]	1	1.12 [28]	.50 [13]	.75 [19]	----	.21 [5]	2.67 [68]	.25 [6]	.34 [9]	.09 [2]	1.02 [26]	8 OR 346	GRAY	W4CVT W4CRT (2)	W4CVT W4CRT (2)	GRAY (4)	A4CR A6CAB (2)	U4CRT U6CABT (2)	U4CRT U6CABT (2)	U4CRT U6CABT (2)	MECHANICAL: MY29-11 (1) HYDRAULIC: Y644, Y644M Y644MBH, Y1000 Y1000BH (1)	1-3/16
YAZ4C-2TC10E2-45				2				1.23 [31]		2.48 [63]															
YAZ4C-2TC10E2-90				3				1.53 [39]		1.54 [39]															
YAZ4C-2TC14			1/4 [M6]	1			.62 [16]	----	.27 [7]	2.67 [68]	.31 [8]			.96 [24]											
YAZ4C-2TC14-45				2				1.23 [31]		2.48 [63]															
YAZ4C-2TC14-90				3				1.53 [39]		1.54 [39]															
YAZ4C-2TC14E2			1/4 [M6]	1			.75 [19]	----		2.80 [71]				1.09 [28]											
YAZ4C-2TC14E2-45				2				1.23 [31]		2.60 [66]															
YAZ4C-2TC14E2-90	#4 AWG [----]	40		3	1.12 [28]	.50 [13]		1.53 [39]	.27 [7]	1.66 [42]	.31 [8]	.34 [9]	.09 [2]		8 OR 346	GRAY	W4CVT W4CRT (2)	W4CVT W4CRT (2)	GRAY (4)	A4CR A6CAB (2)	U4CRT U6CABT (2)	U4CRT U6CABT (2)	U4CRT U6CABT (2)		1-3/16

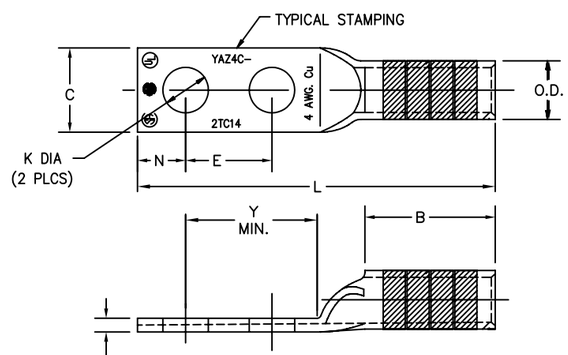

FIG 1

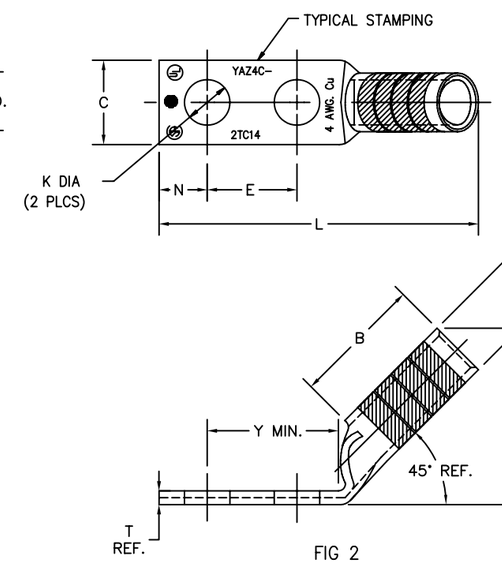

FIG 2

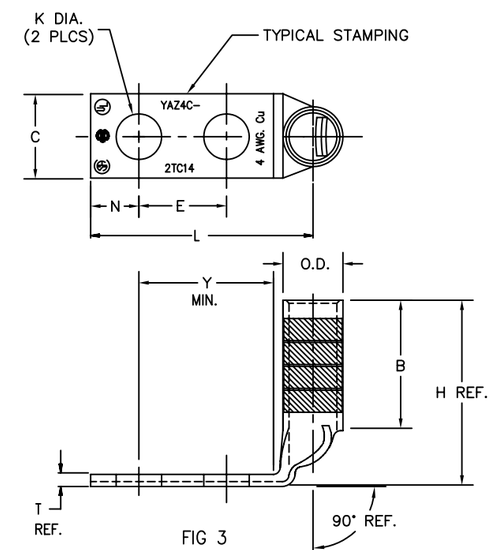

FIG 3

NOTES:

1. MATERIAL: COPPER TUBING.
2. FINISH: TIN PLATED
3. CATALOG # PT6515 ADAPTOR IS REQUIRED TO USE "U" DIES IN Y45 SERIES TOOLS.
4. CATALOG # PUADP-1 ADAPTOR IS REQUIRED TO USE "U" DIES IN Y46 SERIES TOOLS.
5. NAVY CABLE SIZE MAY BE OMITTED ON SOME SIZES BECAUSE OF SPACE LIMITATIONS.
6. PERMANENT DIE IN TOOLING.
7. DIMENSIONS, METRIC WIRE, & METRIC BOLT SIZES IN BRACKETS [ ] ARE IN MILLIMETERS. DIMENSIONS ARE ROUNDED OFF TO THE NEAREST MILLIMETER, UNLESS OTHEWISE NOTED, AND ARE FOR REFERENCE ONLY.
8. FOR USE BY CUSTOMERS THAT HAVE THIS HYPRESS.™ NO NEW Y34A HYPRESS ™ ARE BEING PROCESSED.
9. BATTERY OPERATED TOOLS.

REV.	DATE	DESCRIPTION	ECO	BY	C'K'D.
A	09/14/04	UPDATE CHANGE TO TABLE PER M/U.	9780	DB	PL

TO ORDER BURNDY® PRODUCTS CALL 1-800-346-4175
MANCHESTER, NH 03109, USA
FOR PRODUCT INFO = http://www.fciconnect.com

HYLUG™

ITEM NO: N/A

CAT NO: YAZ4C-2TC- (TABLE)

SCALE:	NTS	
DRAWN BY:	D.BOISVERT	11/11/98
CHECKER:	K.HENRY	12/03/98
DSN APPVL:	B.MACDONALD	12/02/98
MFG APPVL:	N/A	--
QC APPVL:	S.GRAY	11/30/98
MKT APPVL:	B.HARDGROVE	11/25/98
PROD FAM:	--	
PROJECT #:	--	
DOCUMENT TYPE:	Sales	
REL LEVEL:	AutoCAD	

FCI BURNDY PRODUCTS

DRAWING NO	REV
SE211915	A

SIZE: D

SHEET 9 OF 36

SE211915

CATALOG NO.	CONDUCTOR CODE (AWG)	CONDUCTOR NAVY ◁5	BOLT SIZE	FIG. NO.	DIMENSIONS B ±.06	C ±.04	E ±.02	H REF.	K DIA. ±.02	L ±.09	N ±.04	O.D. ±.01	T REF.	Y MIN.	INSTALLATION TOOLING (# CRIMPS): DIE INDEX	COLOR CODE	MECHANICAL RATCHET: MD7-34R MD6	OUR840	Y2MR ◁6	HYDRAULIC: Y34A ◁8	Y750 Y35, BAT35 Y39, BAT750	Y46 ◁4	Y45 ◁3	DIELESS (# CRIMPS)	WIRE STRIP LENGTH
YAZ4C-2TC38	#4 AWG [----]	40	3/8 [M10]	1	1.12 [28]	.58 [15]	1.00 [25]	----	.40 [10]	3.23 [82]	.41 [10]	.34 [9]	.08 [2]	1.43 [36]	8 OR 346	GRAY	W4CVT W4CRT (2)	W4CVT W4CRT (2)	GRAY (4)	A4CR A6CAB (2)	U4CRT U6CABT (2)	U4CRT U6CABT (2)	U4CRT U6CABT (2)	MECHANICAL: MY29-11 (1) HYDRAULIC: Y644, Y644M Y644MBH, Y1000 Y1000BH (1) 1 CRIMP	1-3/16
YAZ4C-2TC38-45				2				1.23 [31]		3.01 [76]															
YAZ4C-2TC38-90				3				1.50 [38]		2.09 [53]															

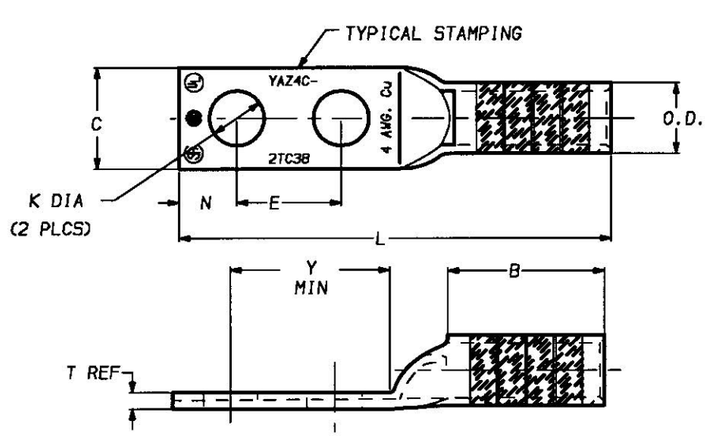

FIG 1

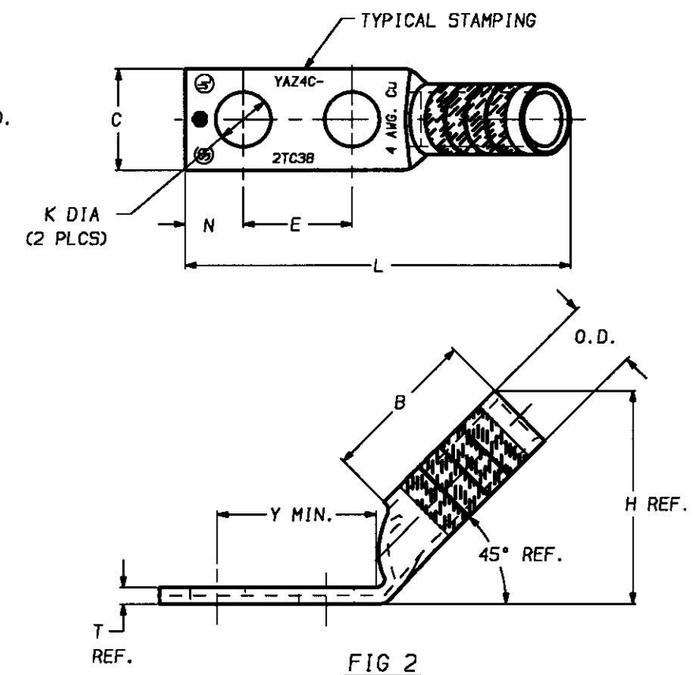

FIG 2

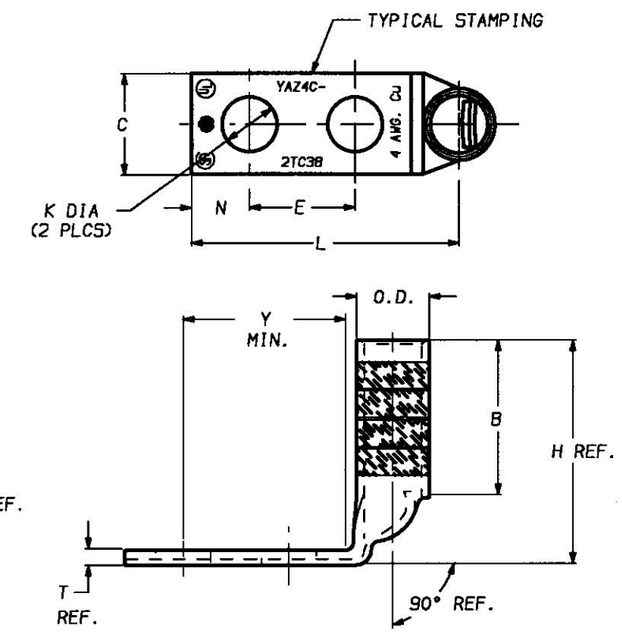

FIG 3

NOTES:

1. MATERIAL: COPPER TUBING.
2. FINISH: TIN PLATED
3. ▷ CATALOG # PT6515 ADAPTOR IS REQUIRED TO USE "U" DIES IN Y45 SERIES TOOLS.
4. ▷ CATALOG # PUADP-1 ADAPTOR IS REQUIRED TO USE "U" DIES IN Y46 SERIES TOOLS.
5. ▷ NAVY CABLE SIZE MAY BE OMITTED ON SOME SIZES BECAUSE OF SPACE LIMITATIONS.
6. ▷ PERMANENT DIE IN TOOLING.
7. DIMENSIONS, METRIC WIRE, & METRIC BOLT SIZES IN BRACKETS [ ] ARE IN MILLIMETERS. DIMENSIONS ARE ROUNDED OFF TO THE NEAREST MILLIMETER, UNLESS OTHEWISE NOTED, AND ARE FOR REFERENCE ONLY.
8. ▷ FOR USE BY CUSTOMERS THAT HAVE THIS HYPRESS.™ NO NEW Y34A HYPRESS™ ARE BEING PROCESSED.

REV.	DATE	DESCRIPTION	BY	C'K'D.
0	11/11/98	RELEASED PER ECO 4612.	DB	KH

HYLUG™

CAT NO: YAZ4C-2TC- (SEE TABLE) — SCALE NTS

DRAWN: D. BOISVERT 11/11/98 — CHECKED: K. HENRY 12/03/98

DSGN APPVL: B. MACDONALD 12/02/98 — MFG APPVL: N/A

Q.A. APPVL: S. GRAY 11/30/98 — MKTG APPVL: B. HARGROVE 11/25/98

CAD FILE: SE211915-10_0 — PM REF: N/A

MDL REF: N/A

PROJECT: .

FRAMATOME CONNECTORS USA INC.
BURNDY ELECTRICAL
FCI
MANCHESTER, NH 03108
U. S. A.
1-800-346-4175

DRAWING NO. SE211915 — REV 0

SHEET 10 OF 36

REV: 061995

SE211915

CATALOG NO.	CONDUCTOR CODE (AWG)	CONDUCTOR NAVY ⟨5⟩	BOLT SIZE	FIG. NO.	DIMENSIONS B ±.06	C ±.04	E ±.02	H REF.	K DIA. ±.02	L ±.09	N ±.04	O.D. ±.01	T REF.	Y MIN.	INSTALLATION TOOLING (# CRIMPS) DIE INDEX	COLOR CODE	MECHANICAL RATCHET MD7-34R MD6	OUR840	Y2MR	HYDRAULIC Y34A ⟨7⟩	Y750 Y35, BAT35 Y39, BAT750	Y46 ⟨4⟩	Y45 ⟨3⟩	DIELESS (# CRIMPS)	WIRE STRIP LENGTH
YAZ3C-2TC14	#3 AWG #2 SOL [25mm² STR]	50	1/4 [M6]	1	1.25 [32]	.55 [14]	.62 [16]	----	.27 [7]	2.83 [72]	.31 [8]	.38 [10]	.09 [2]	.96 [24]	9	WHITE	W3CRT (2)	W3CRT (2)	----	A3CR (2)	U3CRT (2)	U3CRT (2)	U3CRT (2)	MECHANICAL: MY29-11 (1) HYDRAULIC: Y644, Y644M Y644MBH, Y1000 Y1000BH (1)	1-5/16
YAZ3C-2TC14-45				2				1.37 [35]		2.59 [66]															
YAZ3C-2TC14-90				3				1.69 [43]		1.55 [39]															
YAZ3C-2TC14E2	#3 AWG #2 SOL [25mm² STR]	50	1/4 [M6]	1	1.25 [32]	.55 [14]	.75 [19]	----	.27 [7]	2.95 [75]	.31 [8]	.38 [10]	.09 [2]	1.09 [28]	9	WHITE	W3CRT (2)	W3CRT (2)	----	A3CR (2)	U3CRT (2)	U3CRT (2)	U3CRT (2)		1-5/16
YAZ3C-2TC14E2-45				2				1.37 [35]		2.72 [69]															
YAZ3C-2TC14E2-90				3				1.69 [43]		1.68 [43]															

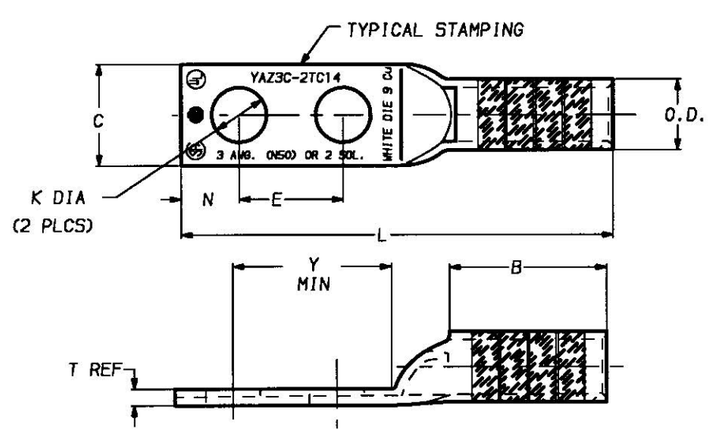

FIG 1

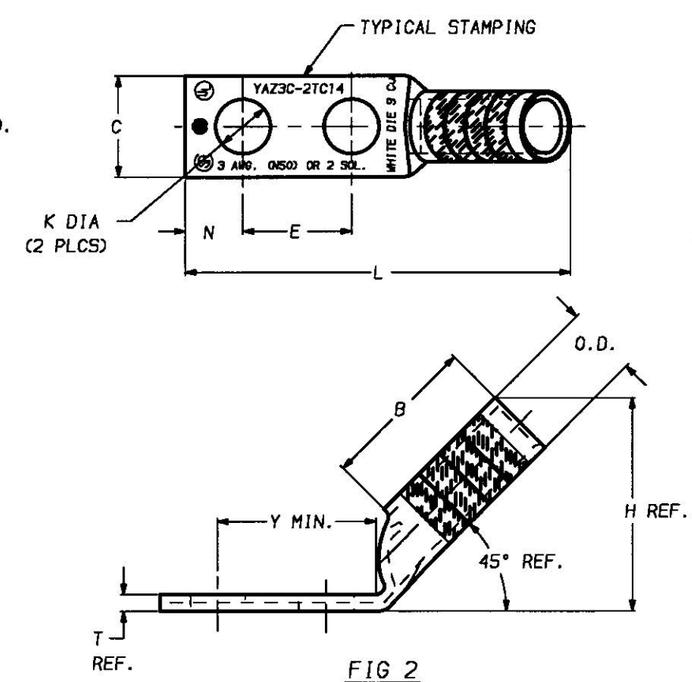

FIG 2

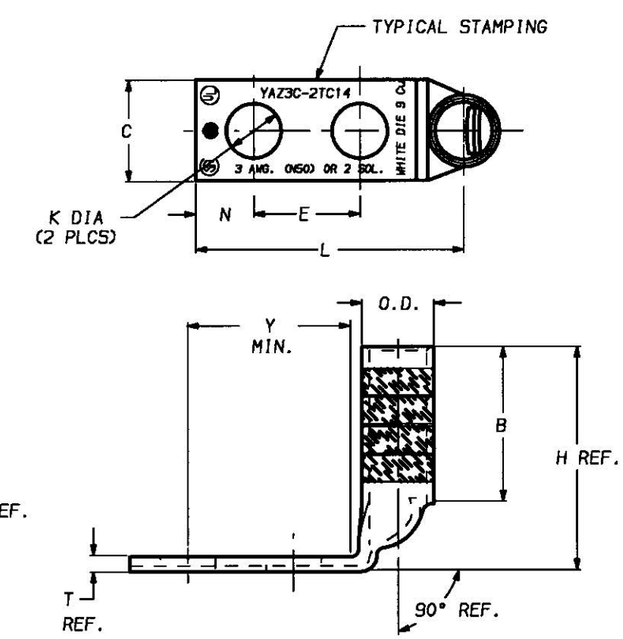

FIG 3

NOTES:

1. MATERIAL: COPPER TUBING.
2. FINISH: TIN PLATED
3. CATALOG # PT6515 ADAPTOR IS REQUIRED TO USE "U" DIES IN Y45 SERIES TOOLS.
4. CATALOG # PUADP-1 ADAPTOR IS REQUIRED TO USE "U" DIES IN Y46 SERIES TOOLS.
5. NAVY CABLE SIZE MAY BE OMITTED ON SOME SIZES BECAUSE OF SPACE LIMITATIONS.
6. DIMENSIONS, METRIC WIRE, & METRIC BOLT SIZES IN BRACKETS [ ] ARE IN MILLIMETERS. DIMENSIONS ARE ROUNDED OFF TO THE NEAREST MILLIMETER, UNLESS OTHEWISE NOTED, AND ARE FOR REFERENCE ONLY.
7. FOR USE BY CUSTOMERS THAT HAVE THIS HYPRESS.™ NO NEW Y34A HYPRESS™ ARE BEING PROCESSED.

REV.	DATE	DESCRIPTION	BY	C'K'D.
0	11/12/98	RELEASED PER ECO 4612.	DB	KH

HYLUG™

CAT NO. YAZ3C-2TC- (SEE TABLE) — SCALE NTS

DRAWN. D. BOISVERT 11/12/98 — CHECKED. K. HENRY 12/03/98

DSGN APPVL. B. MACDONALD 12/02/98 — MFG APPVL. N/A

Q.A. APPVL. S. GRAY 11/30/98 — MKTG APPVL. B. HARGROVE 11/25/98

CAD FILE: SE211915-11_0 — PM REF: N/A

MDL REF: N/A

PROJECT: .

FRAMATOME CONNECTORS USA INC.
BURNDY ELECTRICAL
FCI
MANCHESTER, NH 03108
U. S. A.
1-800-346-4175

DRAWING NO. SE211915 — REV 0

SHEET 11 OF 36

REV. 061995

SE211915

CATALOG NO.	CONDUCTOR CODE (AWG)	CONDUCTOR NAVY ◁5	BOLT SIZE	FIG. NO.	B ±.06	C ±.04	E ±.02	H REF.	K DIA. ±.02	L ±.09	N ±.04	O.D. ±.01	T REF.	Y MIN.	DIE INDEX	COLOR CODE	MECHANICAL RATCHET MD7-34R MD6	MECHANICAL RATCHET OUR840	MECHANICAL RATCHET Y2MR	HYDRAULIC Y34A ◁7	HYDRAULIC Y750 Y35, BAT35 Y39, BAT750	HYDRAULIC Y46 ◁4	HYDRAULIC Y45 ◁3	DIELESS (# CRIMPS)	WIRE STRIP LENGTH
YAZ3C-2TC38E2	#3 AWG #2 SOL [25mm² STR]	50	3/8 [M10]	1	1.25 [32]	.58 [15]	.75 [19]	----	.40 [10]	3.14 [80]	.41 [10]	.38 [10]	.08 [2]	1.18 [30]	9	WHITE	W3CRT (2)	W3CRT (2)	----	A3CR (2)	U3CRT (2)	U3CRT (2)	U3CRT (2)	MECHANICAL: MY29-11 (1)	1-5/16
YAZ3C-2TC38E2-45				2				1.37 [35]		2.88 [73]															
YAZ3C-2TC38E2-90				3				1.67 [42]		1.86 [47]														HYDRAULIC: Y644, Y644M Y644MBH, Y1000 Y1000BH (1)	
YAZ3C-2TC38	#3 AWG #2 SOL [25mm² STR]	50	3/8 [M10]	1	1.25 [32]	.58 [15]	1.00 [25]	----	.40 [10]	3.39 [86]	.41 [10]	.38 [10]	.08 [2]	1.43 [36]	9	WHITE	W3CRT (2)	W3CRT (2)	----	A3CR (2)	U3CRT (2)	U3CRT (2)	U3CRT (2)		1-5/16
YAZ3C-2TC38-45				2				1.37 [35]		3.13 [80]															
YAZ3C-2TC38-90				3				1.67 [42]		2.11 [54]															

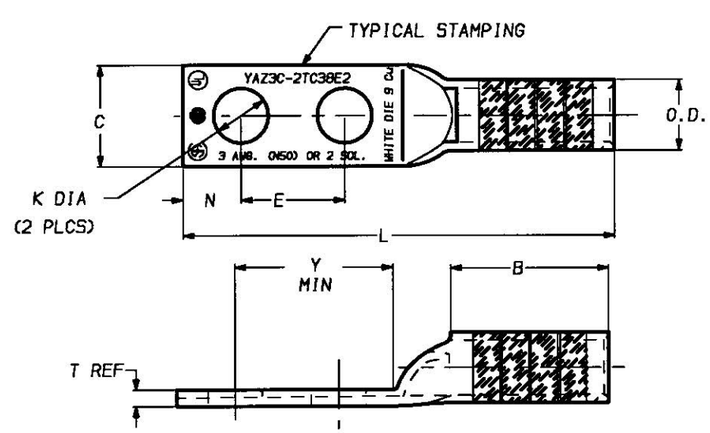

FIG 1

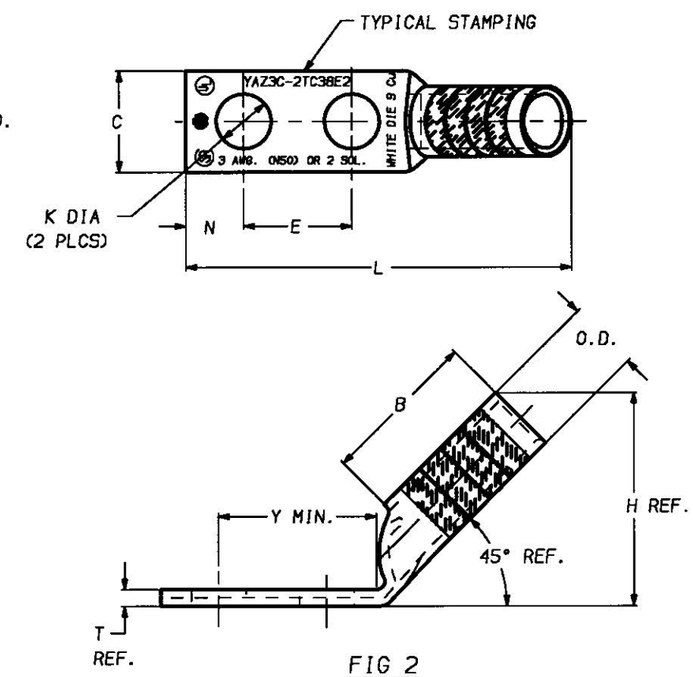

FIG 2

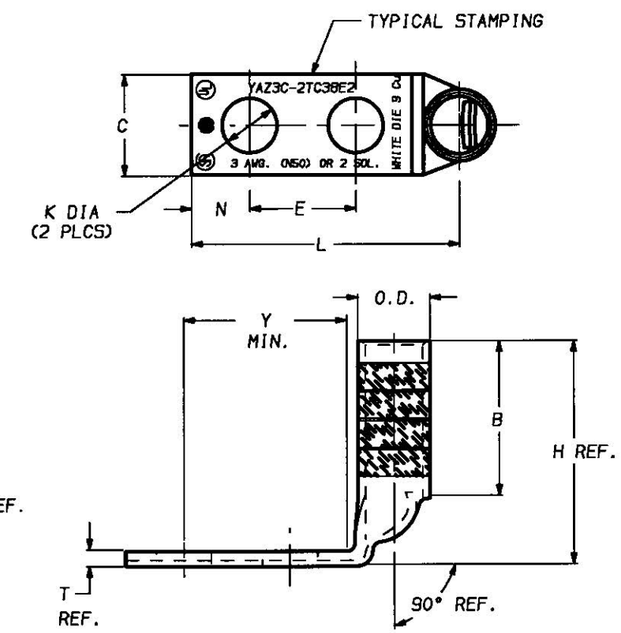

FIG 3

NOTES:

1. MATERIAL: COPPER TUBING.
2. FINISH: TIN PLATED
3. ◁3▷ CATALOG # PT6515 ADAPTOR IS REQUIRED TO USE "U" DIES IN Y45 SERIES TOOLS.
4. ◁4▷ CATALOG # PUADP-1 ADAPTOR IS REQUIRED TO USE "U" DIES IN Y46 SERIES TOOLS.
5. ◁5▷ NAVY CABLE SIZE MAY BE OMITTED ON SOME SIZES BECAUSE OF SPACE LIMITATIONS.
6. DIMENSIONS, METRIC WIRE, & METRIC BOLT SIZES IN BRACKETS [ ] ARE IN MILLIMETERS. DIMENSIONS ARE ROUNDED OFF TO THE NEAREST MILLIMETER, UNLESS OTHEWISE NOTED, AND ARE FOR REFERENCE ONLY.
7. ◁7▷ FOR USE BY CUSTOMERS THAT HAVE THIS HYPRESS.™ NO NEW Y34A HYPRESS™ ARE BEING PROCESSED.

REV.	DATE	DESCRIPTION	BY	C'K'D.
0	11/12/98	RELEASED PER ECO 4612.	DB	KH

HYLUG™

CAT NO. YAZ3C-2TC- (SEE TABLE) — SCALE NTS

DRAWN: D. BOISVERT 11/12/98 — CHECKED: K. HENRY 12/03/98

DSGN APPVL: B. MACDONALD 12/02/98 — MFG APPVL: N/A

Q.A. APPVL: S. GRAY 11/30/98 — MKTG APPVL: B. HARGROVE 11/25/98

CAD FILE: SE211915-12_0 — PM REF: N/A

MDL REF: N/A

PROJECT: .

FRAMATOME CONNECTORS USA INC.
BURNDY ELECTRICAL
MANCHESTER, NH 03108
U. S. A.
1-800-346-4175

DRAWING NO. SE211915 — REV 0

SHEET 12 OF 36

REV. 061995

SE211915

CATALOG NO.	CONDUCTOR CODE (AWG)	CONDUCTOR NAVY ⟨5⟩	BOLT SIZE	FIG. NO.	B ±.06	C ±.04	E ±.02	H REF.	K DIA. ±.02	L ±.09	N ±.04	O.D. ±.01	T REF.	Y MIN.	DIE INDEX	COLOR CODE	MECHANICAL RATCHET MD7-34R MD6	MECHANICAL RATCHET OUR840	MECHANICAL RATCHET Y2MR	HYDRAULIC Y34A ⟨7⟩	HYDRAULIC Y750 Y35, BAT35 Y39, BAT750	HYDRAULIC Y46 ⟨4⟩	HYDRAULIC Y45 ⟨3⟩	DIELESS (# CRIMPS)	WIRE STRIP LENGTH
YAZ2C-2TC10E2	#2 AWG [----]	60	#10 [M5]	1	1.25 [32]	.60 [15]	.75 [19]	----	.21 [5]	2.85 [72]	.25 [6]	.42 [11]	.11 [3]	1.03 [26]	10	BROWN	W2CVT W2CRT (2)	W2CVT W2CRT (2)	----	A2CR (2)	U2CRT (2)	U2CRT (2)	U2CRT (2)	MECHANICAL: MY29-11 (1) HYDRAULIC: Y644, Y644M Y644MBH, Y1000 Y1000BH (1)	1-5/16
YAZ2C-2TC10E2-45				2				1.42 [36]		2.65 [67]															
YAZ2C-2TC10E2-90				3				1.74 [44]		1.58 [40]															
YAZ2C-2TC14			1/4 [M6]	1			.62 [16]	----	.27 [7]	2.85 [72]	.31 [8]			.96 [24]											
YAZ2C-2TC14-45				2				1.42 [36]		2.65 [67]							W2CVT W2CRT (2)	W2CVT W2CRT (2)		A2CR (2)	U2CRT (2)	U2CRT (2)	U2CRT (2)		
YAZ2C-2TC14-90	#2 AWG [----]	60		3	1.25 [32]	.60 [15]		1.74 [44]		1.58 [40]		.42 [11]	.11 [3]		10	BROWN			----						1-5/16

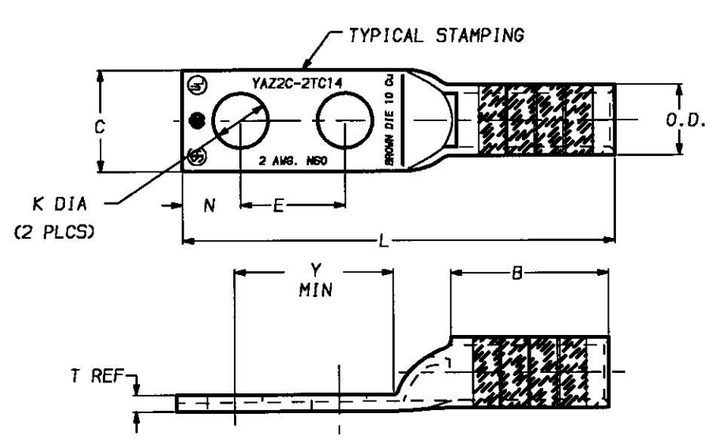

FIG 1

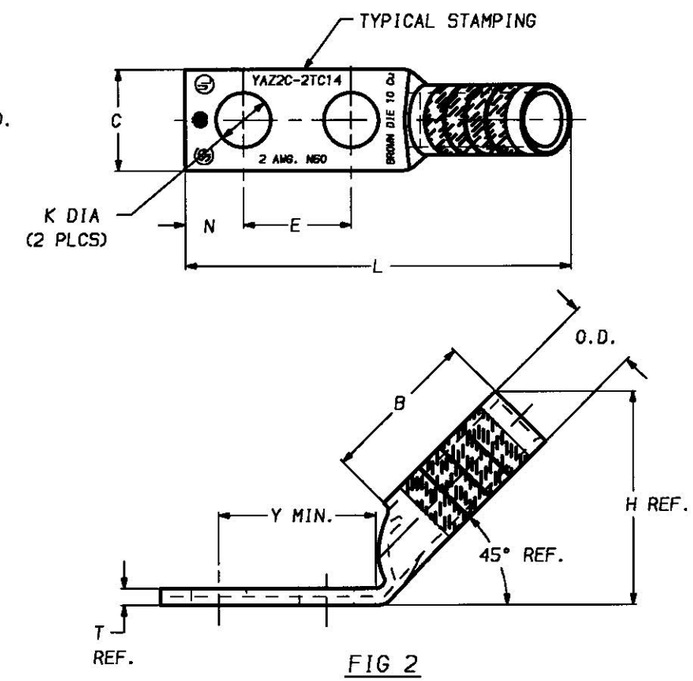

FIG 2

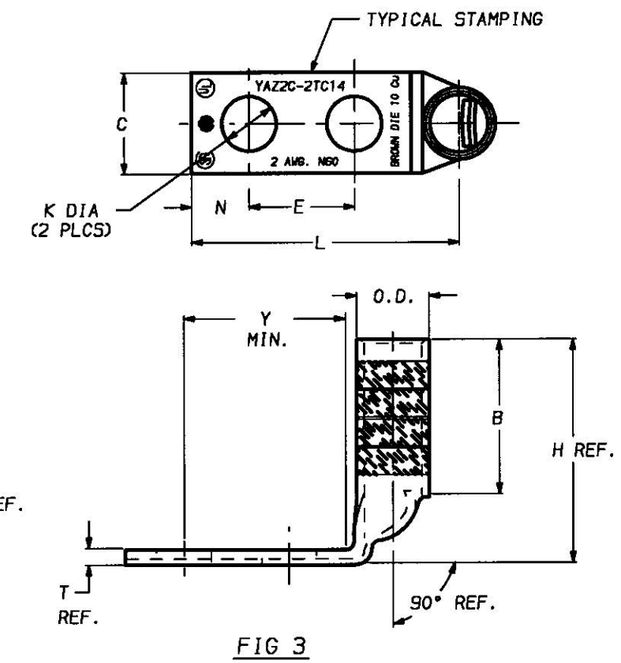

FIG 3

NOTES:

1. MATERIAL: COPPER TUBING.
2. FINISH: TIN PLATED
3. ⟨3⟩ CATALOG # PT6515 ADAPTOR IS REQUIRED TO USE "U" DIES IN Y45 SERIES TOOLS.
4. ⟨4⟩ CATALOG # PUADP-1 ADAPTOR IS REQUIRED TO USE "U" DIES IN Y46 SERIES TOOLS.
5. ⟨5⟩ NAVY CABLE SIZE MAY BE OMITTED ON SOME SIZES BECAUSE OF SPACE LIMITATIONS.
6. DIMENSIONS, METRIC WIRE, & METRIC BOLT SIZES IN BRACKETS [ ] ARE IN MILLIMETERS. DIMENSIONS ARE ROUNDED OFF TO THE NEAREST MILLIMETER, UNLESS OTHEWISE NOTED, AND ARE FOR REFERENCE ONLY.
7. ⟨7⟩ FOR USE BY CUSTOMERS THAT HAVE THIS HYPRESS.™ NO NEW Y34A HYPRESS™ ARE BEING PROCESSED.

REV.	DATE	DESCRIPTION	BY	C'K'D.
0	11/12/98	RELEASED PER ECO 4612.	DB	KH

HYLUG™

CAT NO. YAZ2C-2TC- (SEE TABLE) — SCALE NTS

DRAWN: D. BOISVERT 11/12/98 — CHECKED: K. HENRY 12/03/98
DSGN APPVL: B. MACDONALD 12/02/98 — MFG APPVL: N/A
Q.A. APPVL: S. GRAY 11/30/98 — MKTG APPVL: B. HARGROVE 11/25/98
CAD FILE: SE211915-13_0 — PM REF: N/A
MDL REF: N/A
PROJECT: .

FCI BURNDY PRODUCTS

DRAWING NO. SE211915 — REV 0
SHEET 13 OF 36

REV: 061995

DRAWING NO. SE211915

CATALOG NO.	CONDUCTOR CODE (AWG)	CONDUCTOR NAVY ⟨5⟩	BOLT SIZE	FIG. NO.	DIMENSIONS B ±.06	C ±.04	E ±.02	H REF.	K DIA. ±.02	L ±.09	N ±.04	O.D. ±.01	T REF.	Y MIN.	INSTALLATION TOOLING (# CRIMPS) DIE INDEX	COLOR CODE	MECHANICAL RATCHET MD7-34R MD6	MECHANICAL RATCHET OUR840	MECHANICAL RATCHET Y2MR	HYDRAULIC Y34A ⟨7⟩	HYDRAULIC Y750 Y35, BAT35 Y39, BAT750	HYDRAULIC Y46 ⟨4⟩	HYDRAULIC Y45 ⟨3⟩	DIELESS (# CRIMPS)	WIRE STRIP LENGTH
YAZ2C-2TC14E2	#2 AWG [----]	60	1/4 [M6]	1	1.25 [32]	.60 [15]	.75 [19]	----	.27 [7]	2.97 [75]	.31 [8]	.42 [11]	.11 [3]	1.09 [28]	10	BROWN	W2CVT W2CRT (2)	W2CVT W2CRT (2)	----	A2CR (2)	U2CRT (2)	U2CRT (2)	U2CRT (2)	MECHANICAL: MY29-11 (1) HYDRAULIC: Y644, Y644M Y644MBH, Y1000 Y1000BH (1)	15/16
YAZ2C-2TC14E2-45				2				1.42 [36]		2.77 [70]															
YAZ2C-2TC14E2-90				3				1.74 [44]		1.71 [43]															
YAZ2C-2TC14E1			1/4 [M6]	1		.60 [15]	1.00 [25]	----		3.22 [82]				1.34 [34]											
YAZ2C-2TC14E1-45				2				1.42 [36]		3.02 [77]															
YAZ2C-2TC14E1-90				3				1.74 [44]		1.96 [50]															
YAZ2C-2NT14E1			1/4 [M6]	1		.48 [12]	1.00 [25]	----		3.22 [82]				1.34 [34]											
YAZ2C-2NT14E1-45				2				1.42 [36]		3.02 [77]							W2CVT W2CRT (2)	W2CVT W2CRT (2)							
YAZ2C-2NT14E1-90	#2 AWG [----]	60		3	1.25 [32]			1.74 [44]	.27 [7]	1.96 [50]	.31 [8]	.42 [11]	.11 [3]		10	BROWN			----	A2CR (2)	U2CRT (2)	U2CRT (2)	U2CRT (2)		15/16

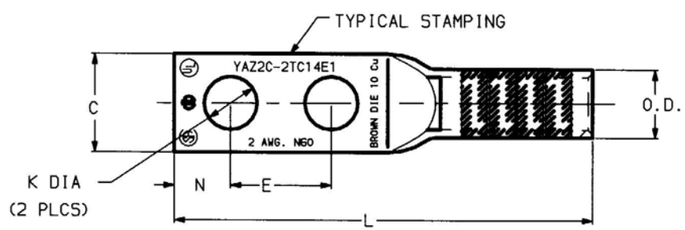

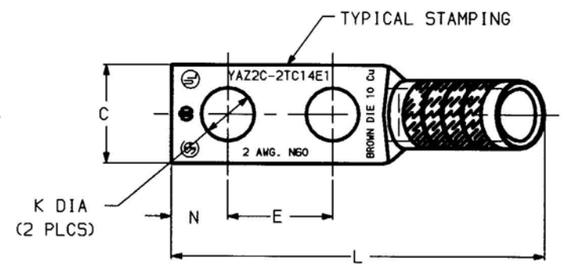

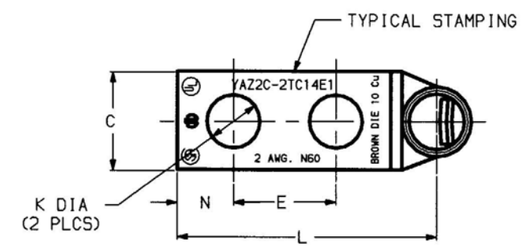

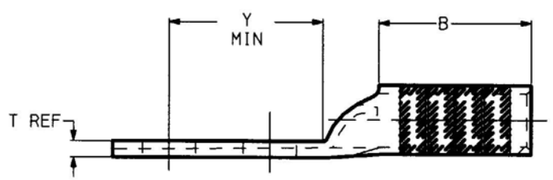

FIG 1

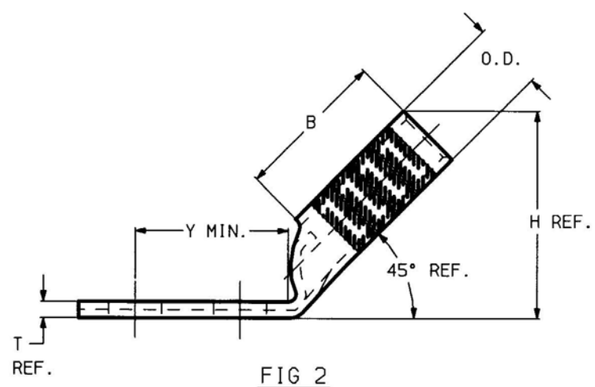

FIG 2

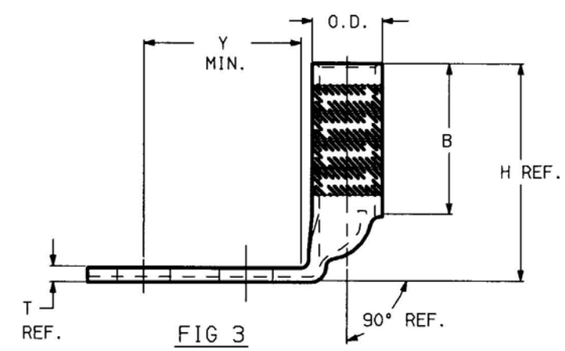

FIG 3

NOTES:

1. MATERIAL: COPPER TUBING.
2. FINISH: TIN PLATED

⟨3⟩ CATALOG # PT6515 ADAPTOR IS REQUIRED TO USE "U" DIES IN Y45 SERIES TOOLS.

⟨4⟩ CATALOG # PUADP-1 ADAPTOR IS REQUIRED TO USE "U" DIES IN Y46 SERIES TOOLS.

⟨5⟩ NAVY CABLE SIZE MAY BE OMITTED ON SOME SIZES BECAUSE OF SPACE LIMITATIONS.

6. DIMENSIONS, METRIC WIRE, & METRIC BOLT SIZES IN BRACKETS [ ] ARE IN MILLIMETERS. DIMENSIONS ARE ROUNDED OFF TO THE NEAREST MILLIMETER, UNLESS OTHEWISE NOTED, AND ARE FOR REFERENCE ONLY.

⟨7⟩ FOR USE BY CUSTOMERS THAT HAVE THIS HYPRESS.™ NO NEW Y34A HYPRESS™ ARE BEING PROCESSED.

REV.	DATE	DESCRIPTION	BY	C'K'D.
1	7/27/00	UPDATE FORMAT, ADD CAT.#'S TO TABLE PER ECO 5879.	DB	PL
0	11/12/98	RELEASED PER ECO 4612.	DB	KH

TO ORDER BURNDY PRODUCTS CALL 1-800-346-4175
MANCHESTER, NH 03109, USA
FOR PRODUCT INFO = http://www.fciconnect.com

HYLUG ™

CAT NO: YAZ2C-2TC- (TABLE) SCALE NTS

DRAWN: D.BOISVERT 11/12/98 CHECKED: K.HENRY 12/03/98
DSGN APPVL: B. MACDONALD 12/02/98 MFG APPVL: N/A
Q.A. APPVL: S.GRAY 11/30/98
MKTG APPVL: B.HARGROVE 11/25/98
CAD FILE: SE211915-14_1
MDL REF: N/A

FCI FRAMATOME GROUP
BURNDY . RACINE . MALICO . SAAE Products

DRAWING NO. SE211915 REV 1
SHEET 14 OF 36

REV. 061995

DRAWING NO. SE211915

CATALOG NO.	CONDUCTOR CODE (AWG)	CONDUCTOR NAVY ⟨5⟩	BOLT SIZE	FIG. NO.	B ±.06	C ±.04	E ±.02	H REF.	K DIA. ±.02	L ±.09	N ±.04	O.D. ±.01	T REF.	Y MIN.	DIE INDEX	COLOR CODE	MECHANICAL RATCHET MD7-34R MD6	MECHANICAL RATCHET OUR840	MECHANICAL RATCHET Y2MR	HYDRAULIC Y34A ⟨7⟩	HYDRAULIC Y750 Y35, BAT35 Y39, BAT750	HYDRAULIC Y46 ⟨4⟩	HYDRAULIC Y45 ⟨3⟩	DIELESS (# CRIMPS)	WIRE STRIP LENGTH
					DIMENSIONS										INSTALLATION TOOLING (# CRIMPS)										
YAZ2C-2TC516	#2 AWG [----]	60	5/16 [M8]	1	1.25 [32]	.60 [15]	100 [25]	----	.33 [8]	3.28 [83]	.34 [9]	.42 [11]	.11 [3]	1.37 [35]	10	BROWN	W2CVT W2CRT (2)	W2CVT W2CRT (2)	----	A2CR (2)	U2CRT (2)	U2CRT (2)	U2CRT (2)	MECHANICAL: MY29-11 (1) HYDRAULIC: Y644, Y644M Y644MBH, Y1000 Y1000BH (1)	1-5/16
YAZ2C-2TC516-45				2				1.42 [36]		3.09 [78]															
YAZ2C-2TC516-90				3				1.74 [44]		2.02 [51]															
YAZ2C-2TC516E2			5/16 [M8]	1			.75 [19]	----	.33 [8]	3.03 [77]	.34 [9]			1.12 [28]											
YAZ2C-2TC516E2-45				2				1.42 [36]		2.84 [72]															
YAZ2C-2TC516E2-90				3				1.74 [44]		1.77 [45]															
YAZ2C-2TC38E2			3/8 [M10]	1				----	.40 [10]	3.16 [80]	.41 [10]			1.18 [30]											
YAZ2C-2TC38E2-45				2				1.42 [36]		2.96 [75]															
YAZ2C-2TC38E2-90	#2 AWG [----]	60		3	1.25 [32]	.60 [15]	.75 [19]	1.74 [44]		1.90 [48]		.42 [11]	.11 [3]		10	BROWN	W2CVT W2CRT (2)	W2CVT W2CRT (2)	----	A2CR (2)	U2CRT (2)	U2CRT (2)	U2CRT (2)		1-5/16

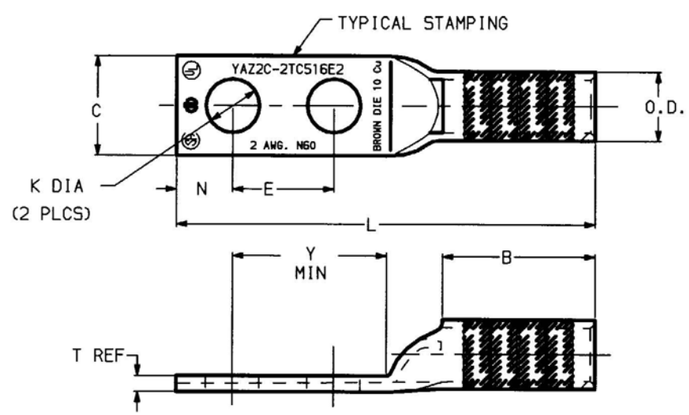

FIG 1

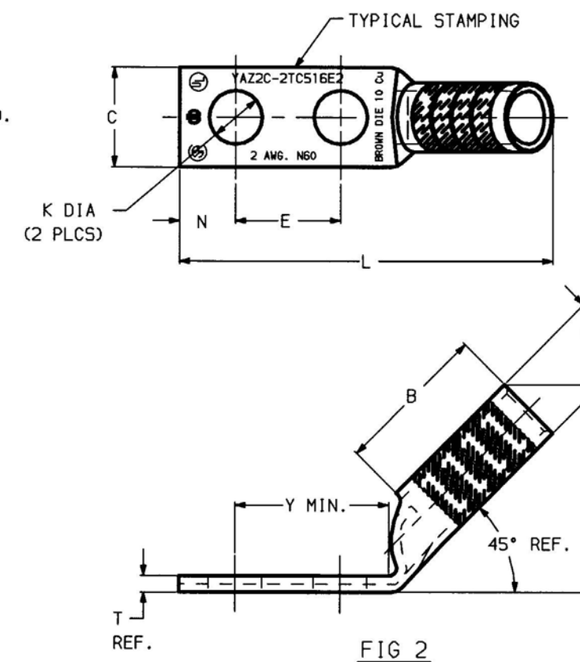

FIG 2

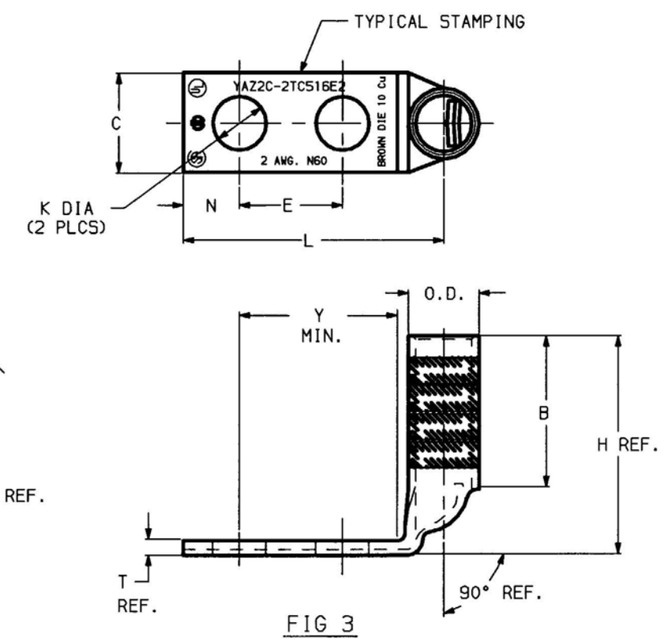

FIG 3

NOTES:

1. MATERIAL: COPPER TUBING.
2. FINISH: TIN PLATED
3. ⟨3⟩ CATALOG # PT6515 ADAPTOR IS REQUIRED TO USE "U" DIES IN Y45 SERIES TOOLS.
4. ⟨4⟩ CATALOG # PUADP-1 ADAPTOR IS REQUIRED TO USE "U" DIES IN Y46 SERIES TOOLS.
5. ⟨5⟩ NAVY CABLE SIZE MAY BE OMITTED ON SOME SIZES BECAUSE OF SPACE LIMITATIONS.
6. DIMENSIONS, METRIC WIRE, & METRIC BOLT SIZES IN BRACKETS [ ] ARE IN MILLIMETERS. DIMENSIONS ARE ROUNDED OFF TO THE NEAREST MILLIMETER, UNLESS OTHEWISE NOTED, AND ARE FOR REFERENCE ONLY.
7. ⟨7⟩ FOR USE BY CUSTOMERS THAT HAVE THIS HYPRESS.™ NO NEW Y34A HYPRESS™ ARE BEING PROCESSED.

REV.	DATE	DESCRIPTION	ECO	BY	C'K'D.
1	6/04/01	ADD CAT. #'S YAZ2C-2TC516, -45, -90 TO TABLE PER M/U.	6481	DB	PL

TO ORDER BURNDY PRODUCTS CALL 1-800-346-4175
MANCHESTER, NH 03109, USA
FOR PRODUCT INFO = http://www.fciconnect.com

HYLUG™

CAT NO: YAZ2C-2TC- (SEE TABLE)

SCALE NTS

DRAWN: D.BOISVERT 11/12/98
CHECKED: K.HENRY 1/03/98
DSGN APPVL: .B.MACDONALD 12/02/98
MFG APPVL: N/A
Q.A. APPVL: S.GRAY 11/30/98
MKTG APPVL: B.HARGROVE 11/25/98
CAD FILE: SE211915-15_1
MDL REF: N/A

FCI FRAMATOME GROUP
BURNDY . RACINE . MALICO . SAAE Products

DRAWING NO. SE211915 REV 1

SHEET 15 OF 36

REV. 061995

SE211915

CATALOG NO.	CONDUCTOR CODE (AWG)	CONDUCTOR NAVY 5	BOLT SIZE	FIG. NO.	B ±.06	C ±.04	E ±.02	H REF.	K DIA. ±.02	L ±.09	N ±.04	O.D. ±.01	T REF.	Y MIN.	DIE INDEX	COLOR CODE	MECHANICAL RATCHET MD7-34R MD6	MECHANICAL RATCHET OUR840	MECHANICAL RATCHET Y2MR	HYDRAULIC Y34A 7	HYDRAULIC Y750 Y35, BAT35 Y39, BAT750	HYDRAULIC Y46 4	HYDRAULIC Y45 3	DIELESS (# CRIMPS)	WIRE STRIP LENGTH
YAZ2C-2TC38E6	#2 AWG [----]	60	3/8 [M10]	1	1.25 [32]	.60 [15]	.88 [22]	----	.40 [10]	3.28 [83]	.41 [10]	.42 [11]	.11 [3]	1.31 [33]	10	BROWN	W2CVT W2CRT (2)	W2CVT W2CRT (2)	----	A2CR (2)	U2CRT (2)	U2CRT (2)	U2CRT (2)	MECHANICAL: MY29-11 (1) HYDRAULIC: Y644, Y644M Y644MBH, Y1000 Y1000BH (1)	1-5/16
YAZ2C-2TC38E6-45				2				1.42 [36]		3.09 [78]															
YAZ2C-2TC38E6-90				3				1.74 [44]		2.02 [51]															
YAZ2C-2TC38			3/8 [M10]	1			1.00 [25]	----		3.41 [87]				1.43 [36]											
YAZ2C-2TC38-45				2				1.42 [36]		3.21 [82]							W2CVT W2CRT (2)	W2CVT W2CRT (2)							
YAZ2C-2TC38-90	#2 AWG [----]	60		3	1.25 [32]	.60 [15]		1.74 [44]	.40 [10]	2.14 [54]	.41 [10]	.42 [11]	.11 [3]		10	BROWN			----	A2CR (2)	U2CRT (2)	U2CRT (2)	U2CRT (2)		1-5/16

INSTALLATION TOOLING (# CRIMPS)

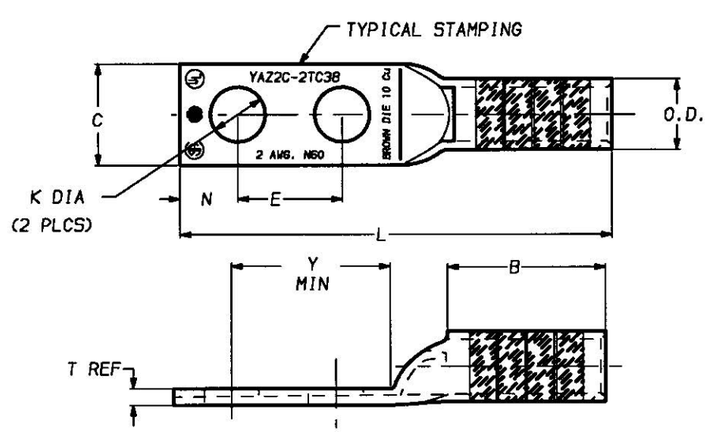

FIG 1

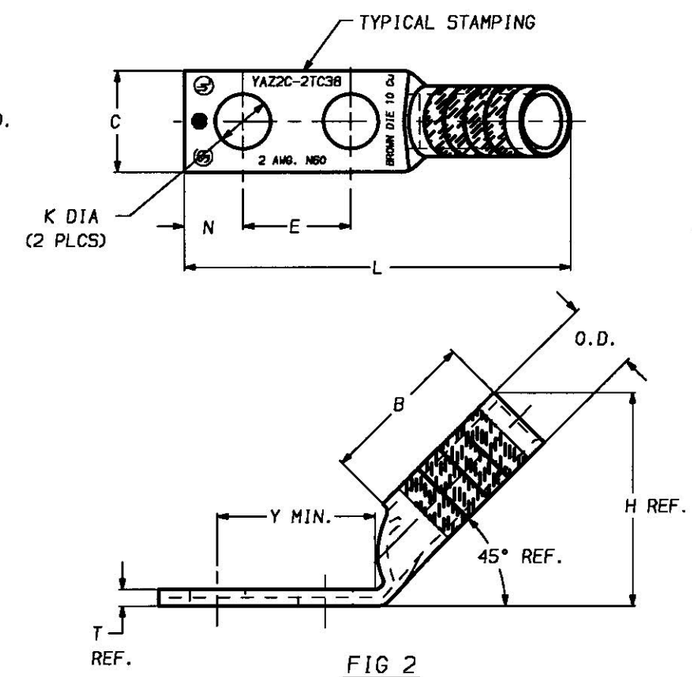

FIG 2

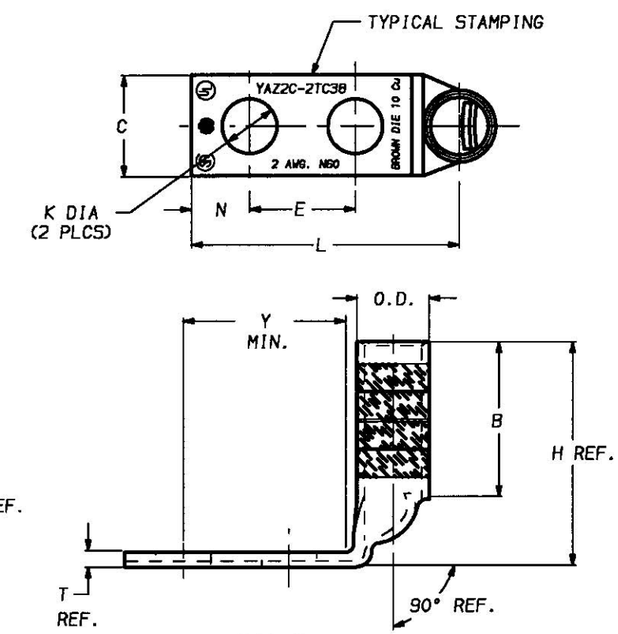

FIG 3

NOTES:

1. MATERIAL: COPPER TUBING.
2. FINISH: TIN PLATED
3. CATALOG # PT6515 ADAPTOR IS REQUIRED TO USE "U" DIES IN Y45 SERIES TOOLS.
4. CATALOG # PUADP-1 ADAPTOR IS REQUIRED TO USE "U" DIES IN Y46 SERIES TOOLS.
5. NAVY CABLE SIZE MAY BE OMITTED ON SOME SIZES BECAUSE OF SPACE LIMITATIONS.
6. DIMENSIONS, METRIC WIRE, & METRIC BOLT SIZES IN BRACKETS [ ] ARE IN MILLIMETERS. DIMENSIONS ARE ROUNDED OFF TO THE NEAREST MILLIMETER, UNLESS OTHEWISE NOTED, AND ARE FOR REFERENCE ONLY.
7. FOR USE BY CUSTOMERS THAT HAVE THIS HYPRESS.™ NO NEW Y34A HYPRESS™ ARE BEING PROCESSED.

REV.	DATE	DESCRIPTION	BY	C'K'D.
0	11/12/98	RELEASED PER ECO 4612.	DB	KH

HYLUG™

CAT NO. YAZ2C-2TC- (SEE TABLE) | SCALE NTS

DRAWN: D. BOISVERT 11/12/98 | CHECKED: K. HENRY 12/03/98

DSGN APPVL: B. MACDONALD 12/02/98 | MFG APPVL: N/A

Q.A. APPVL: S. GRAY 11/30/98 | MKTG APPVL: B. HARGROVE 11/25/98

CAD FILE: SE211915-16_0 | PM REF: N/A

NDL REF: N/A

PROJECT: .

FRAMATOME CONNECTORS USA INC.
BURNDY ELECTRICAL
MANCHESTER, NH 03108
U. S. A.
1-800-346-4175

DRAWING NO. SE211915 | REV 0

SHEET 16 OF 36

REV. 061995

DRAWING NO. SE211915

CATALOG NO.	CONDUCTOR CODE (AWG)	CONDUCTOR NAVY ⟨5⟩	BOLT SIZE	FIG. NO.	B ±.06	C ±.04	E ±.02	H REF.	K DIA. ±.02	L ±.09	N ±.04	O.D. ±.01	T REF.	Y MIN.	DIE INDEX	COLOR CODE	MECHANICAL RATCHET MD7-34R MD6	MECHANICAL RATCHET OUR840	MECHANICAL RATCHET Y2MR	HYDRAULIC Y34A ⟨7⟩	HYDRAULIC Y750 Y35, BAT35 Y39, BAT750	HYDRAULIC Y46 ⟨4⟩	HYDRAULIC Y45 ⟨3⟩	DIELESS (# CRIMPS)	WIRE STRIP LENGTH
YAZ2C-2NTC38	#2 AWG [----]	60	3/8 [M10]	1	1.25 [32]	.60 [15]	1.75 [44]	----	.40 [10]	4.16 [106]	.41 [10]	.42 [11]	.11 [3]	2.18 [55]	10	BROWN	W2CVT W2CRT (2)	W2CVT W2CRT (2)	----	A2CR (2)	U2CRT (2)	U2CRT (2)	U2CRT (2)	MECHANICAL: MY29-11 (1) HYDRAULIC: Y644, Y644M Y644MBH, Y1000 Y1000BH (1)	1-5/16
YAZ2C-2NTC38-45				2				1.42 [36]		3.96 [101]															
YAZ2C-2NTC38-90				3				1.74 [44]		2.90 [74]															
YAZ2C-2NTC			1/2 [M12]	1				----	.56 [14]	4.60 [117]	.62 [16]			2.40 [61]											
YAZ2C-2NTC-45				2				1.42 [36]		4.32 [110]															
YAZ2C-2NTC-90	#2 AWG [----]	60		3	1.25 [32]	.60 [15]	1.75 [44]	1.74 [44]		3.32 [84]		.42 [11]	.11 [3]		10	BROWN	W2CVT W2CRT (2)	W2CVT W2CRT (2)	----	A2CR (2)	U2CRT (2)	U2CRT (2)	U2CRT (2)		1-5/16

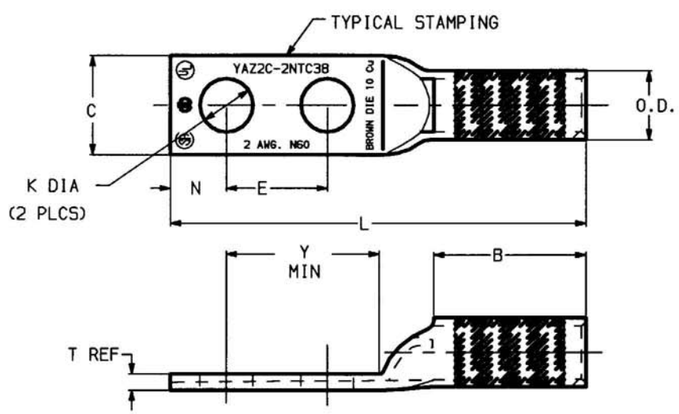

FIG 1

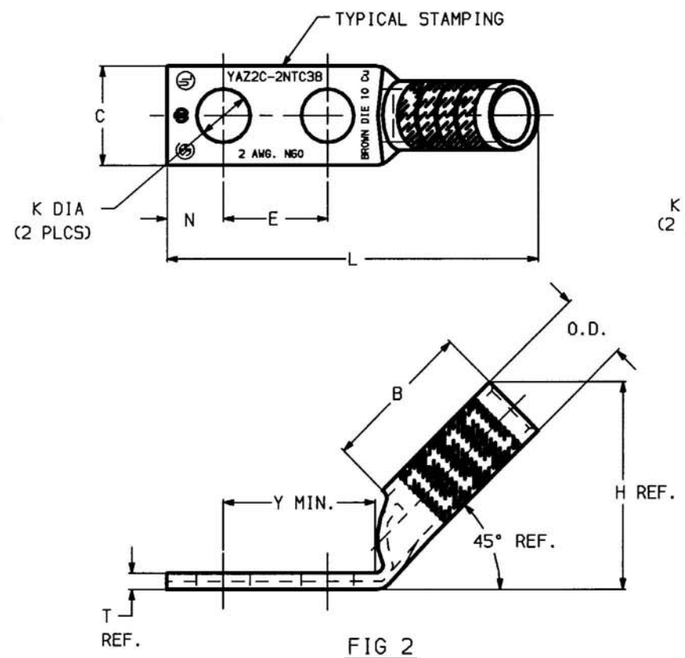

FIG 2

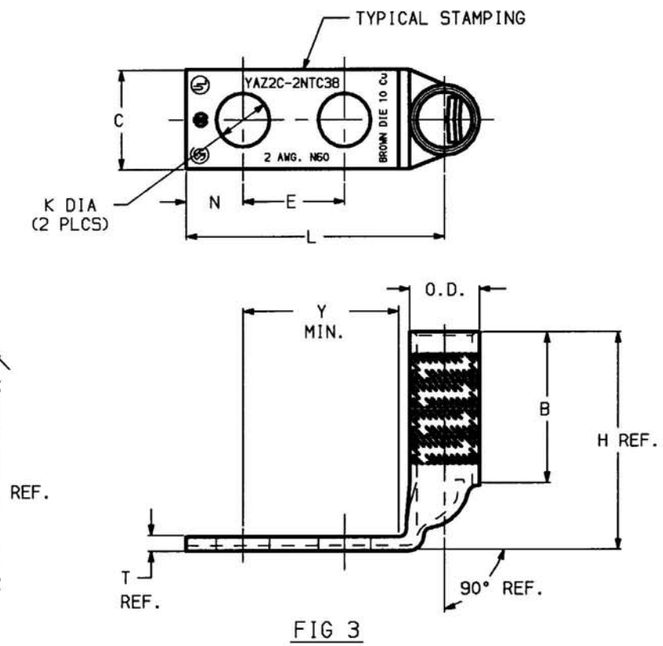

FIG 3

NOTES:

1. MATERIAL: COPPER TUBING.
2. FINISH: TIN PLATED
3. ⟨3⟩ CATALOG # PT6515 ADAPTOR IS REQUIRED TO USE "U" DIES IN Y45 SERIES TOOLS.
4. ⟨4⟩ CATALOG # PUADP-1 ADAPTOR IS REQUIRED TO USE "U" DIES IN Y46 SERIES TOOLS.
5. ⟨5⟩ NAVY CABLE SIZE MAY BE OMITTED ON SOME SIZES BECAUSE OF SPACE LIMITATIONS.
6. DIMENSIONS, METRIC WIRE, & METRIC BOLT SIZES IN BRACKETS [ ] ARE IN MILLIMETERS. DIMENSIONS ARE ROUNDED OFF TO THE NEAREST MILLIMETER, UNLESS OTHEWISE NOTED, AND ARE FOR REFERENCE ONLY.
7. ⟨7⟩ FOR USE BY CUSTOMERS THAT HAVE THIS HYPRESS.™ NO NEW Y34A HYPRESS™ ARE BEING PROCESSED.

REV.	DATE	DESCRIPTION	ECO	BY	C'K'D.
1	6/04/01	ADD CAT.#'S YAZ2C-2NTC, -45, -90 TO TABLE.	6481	DB	PL

TO ORDER BURNDY PRODUCTS CALL 1-800-346-4175
MANCHESTER, NH 03109, USA
FOR PRODUCT INFO = http://www.fciconnect.com

HYLUG™

CAT NO: YAZ2C-2NTC- (TABLE) SCALE NTS

DRAWN: D.BOISVERT 11/12/98 CHECKED: K.HENRY 12/03/98
DSGN APPVL: B.MACDONALD 12/02/98 MFG APPVL: N/A
Q.A. APPVL: S.GRAY 11/30/98
MKTG APPVL: B.HARDGROVE 11/25/98
CAD FILE: SE211915-17_1
MDL REF: N/A

FCI FRAMATOME GROUP
BURNDY . RACINE . MALICO . SAAE Products

DRAWING NO. SE211915 REV 1
SHEET 17 OF 36

REV: 061995

SE211915

CATALOG NO.	CONDUCTOR CODE (AWG)	CONDUCTOR NAVY ⟨5⟩	BOLT SIZE	FIG. NO.	B ±.06	C ±.04	E ±.02	H REF.	K DIA. ±.02	L ±.09	N ±.04	O.D. ±.01	T REF.	Y MIN.	DIE INDEX	COLOR CODE	MECHANICAL RATCHET MD7-34R MD6	MECHANICAL RATCHET OUR840	MECHANICAL RATCHET Y2MR	HYDRAULIC Y34A ⟨7⟩	HYDRAULIC Y750 Y35, BAT35 Y39, BAT750	HYDRAULIC Y46 ⟨4⟩	HYDRAULIC Y45 ⟨3⟩	DIELESS (# CRIMPS)	WIRE STRIP LENGTH
YAZ1C-2TC14	#1 AWG [----]	75	1/4 [M6]	1	1.38 [35]	.67 [17]	.62 [16]	----	.27 [7]	3.01 [76]	.31 [8]	.46 [12]	.10 [3]	.96 [24]	11 OR 375	GREEN	W1CVT W1CRT (2)	W1CVT W1CRT (2)	----	A1CR A4CAB (2)	U1CRT U4CABT (2)	U1CRT U4CABT (2)	U1CRT U4CABT (2)	MECHANICAL: MY29-11 (1) HYDRAULIC: Y644, Y644M Y644MBH, Y1000 Y1000BH (1)	1-7/16
YAZ1C-2TC14-45				2				1.57 [40]		2.75 [70]															
YAZ1C-2TC14-90				3				1.90 [48]		1.60 [41]															
YAZ1C-2TC14E2			1/4 [M6]	1			.75 [19]	----		3.13 [80]				1.09 [28]											
YAZ1C-2TC14E2-45				2				1.57 [40]		2.87 [73]							W1CVT W1CRT (2)	W1CVT W1CRT (2)		A1CR A4CAB (2)	U1CRT U4CABT (2)	U1CRT U4CABT (2)	U1CRT U4CABT (2)		
YAZ1C-2TC14E2-90	#1 AWG [----]	75		3	1.38 [35]	.67 [17]		1.90 [48]	.27 [7]	1.73 [44]	.31 [8]	.46 [12]	.10 [3]		11 OR 375	GREEN			----						1-7/16

INSTALLATION TOOLING (# CRIMPS)

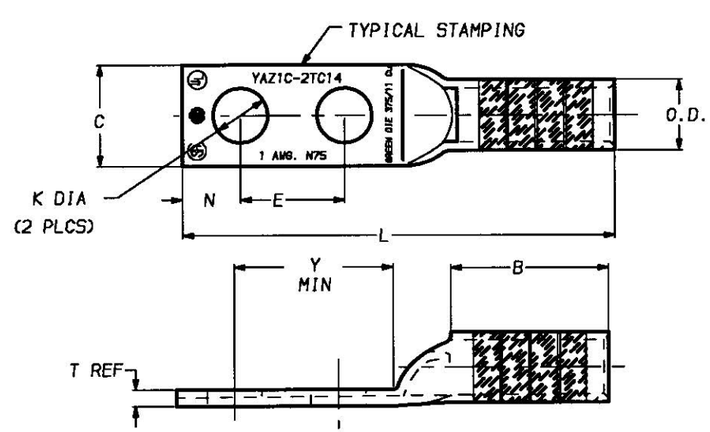

FIG 1

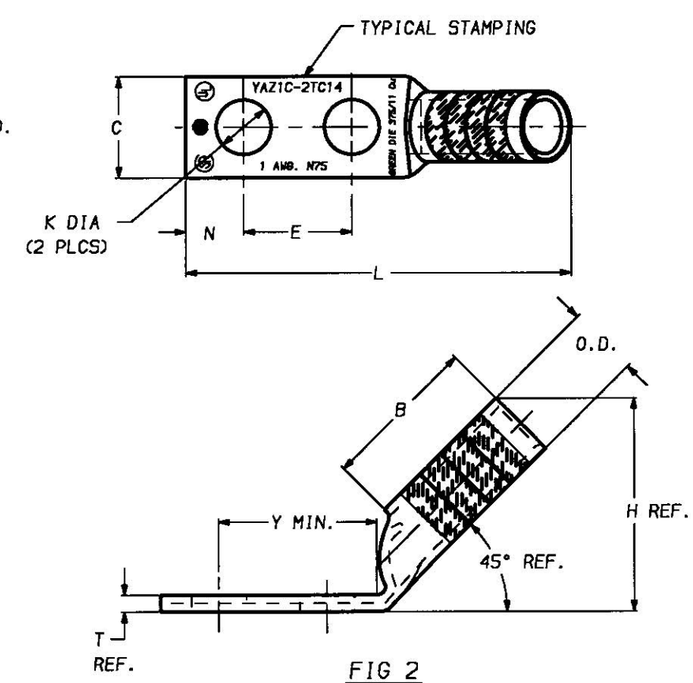

FIG 2

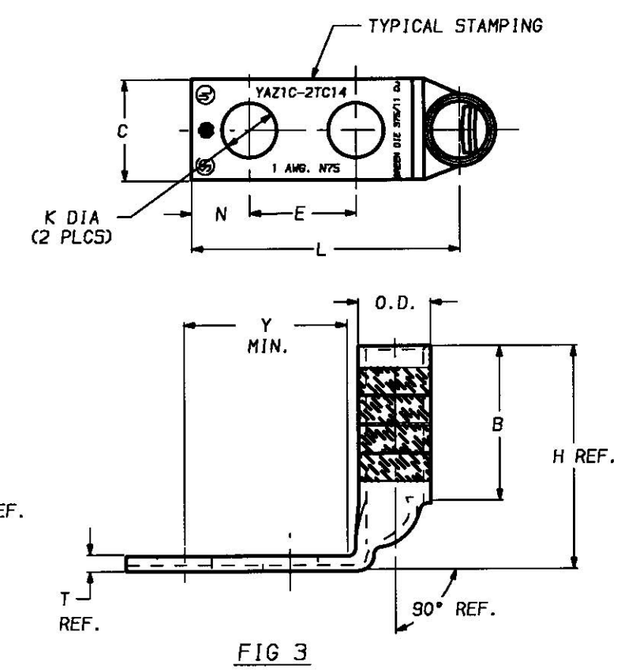

FIG 3

NOTES:

1. MATERIAL: COPPER TUBING.
2. FINISH: TIN PLATED
3. ⟨3⟩ CATALOG # PT6515 ADAPTOR IS REQUIRED TO USE "U" DIES IN Y45 SERIES TOOLS.
4. ⟨4⟩ CATALOG # PUADP-1 ADAPTOR IS REQUIRED TO USE "U" DIES IN Y46 SERIES TOOLS.
5. ⟨5⟩ NAVY CABLE SIZE MAY BE OMITTED ON SOME SIZES BECAUSE OF SPACE LIMITATIONS.
6. DIMENSIONS, METRIC WIRE, & METRIC BOLT SIZES IN BRACKETS [ ] ARE IN MILLIMETERS. DIMENSIONS ARE ROUNDED OFF TO THE NEAREST MILLIMETER, UNLESS OTHEWISE NOTED, AND ARE FOR REFERENCE ONLY.
7. ⟨7⟩ FOR USE BY CUSTOMERS THAT HAVE THIS HYPRESS.™ NO NEW Y34A HYPRESS™ ARE BEING PROCESSED.

REV.	DATE	DESCRIPTION	BY	C'K'D.
0	11/12/98	RELEASED PER ECO 4612.	DB	KH

HYLUG™

CAT NO: YAZ1C-2TC- (SEE TABLE) — SCALE NTS

DRAWN: D. BOISVERT 11/12/98 — CHECKED: K. HENRY 12/03/98

DSGN APPVL: B. MACDONALD 12/02/98 — MFG APPVL: N/A

Q.A. APPVL: S. GRAY 11/30/98 — MKTG APPVL: B. HARGROVE 11/25/98

CAD FILE: SE211915-18_0 — PM REF: N/A

MDL REF: N/A

PROJECT: .

FRAMATOME CONNECTORS USA INC.
BURNDY ELECTRICAL
MANCHESTER, NH 03108
U. S. A.
1-800-346-4175

DRAWING NO. SE211915 — REV 0

SHEET 18 OF 36

REV. 061995

SE211915

CATALOG NO.	CONDUCTOR CODE (AWG)	CONDUCTOR NAVY ◁5	BOLT SIZE	FIG. NO.	DIMENSIONS B ±.06	C ±.04	E ±.02	H REF.	K DIA. ±.02	L ±.09	N ±.04	O.D. ±.01	T REF.	Y MIN.	INSTALLATION TOOLING (# CRIMPS) DIE INDEX	COLOR CODE	MECHANICAL RATCHET MD7-34R MD6	OUR840	Y2MR	HYDRAULIC Y34A ◁7	Y750 Y35, BAT35 Y39, BAT750	Y46 ◁4	Y45 ◁3	DIELESS (# CRIMPS)	WIRE STRIP LENGTH
YAZ1C-2TC38	#1 AWG [----]	75	3/8 [M10]	1	1.38 [35]	.67 [17]	1.00 [25]	----	.40 [10]	3.57 [91]	.41 [10]	.46 [12]	.10 [3]	1.43 [36]	11 OR 375	GREEN	W1CVT W1CRT (2)	W1CVT W1CRT (2)	----	A1CR A4CAB (2)	U1CRT U4CABT (2)	U1CRT U4CABT (2)	U1CRT U4CABT (2)	MECHANICAL: MY29-11 (1) HYDRAULIC: Y644, Y644M Y644MBH, Y1000 Y1000BH (1)	1-7/16
YAZ1C-2TC38-45				2				1.57 [40]		3.31 [84]															
YAZ1C-2TC38-90				3				1.90 [48]		2.16 [55]															

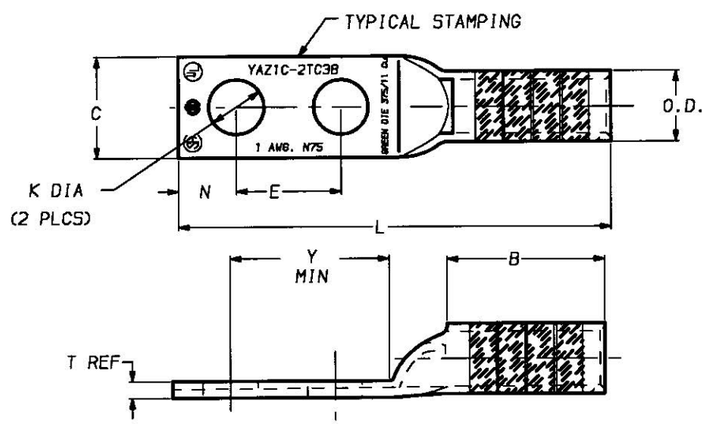

FIG 1

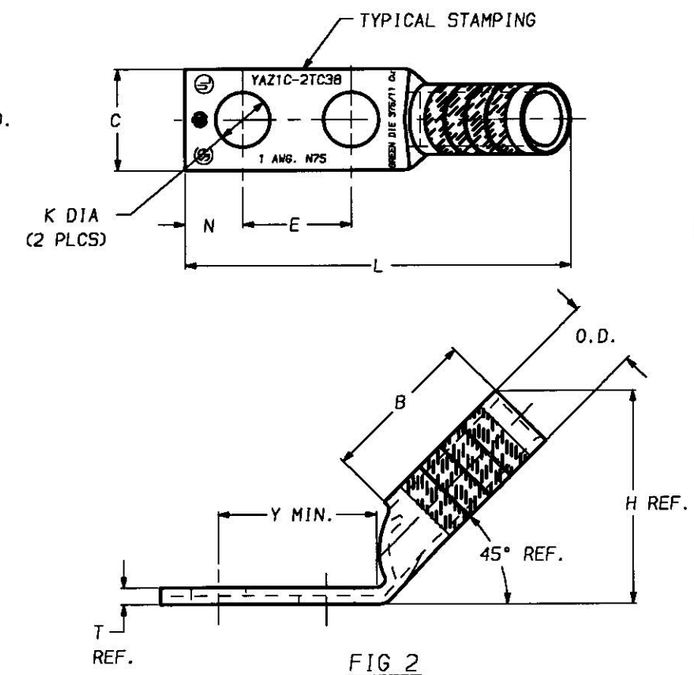

FIG 2

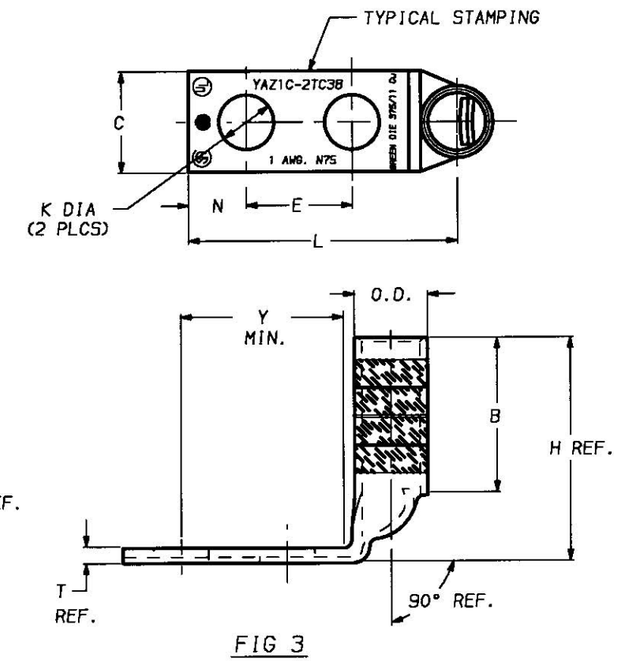

FIG 3

NOTES:

1. MATERIAL: COPPER TUBING.
2. FINISH: TIN PLATED
3. ◁3▷ CATALOG # PT6515 ADAPTOR IS REQUIRED TO USE "U" DIES IN Y45 SERIES TOOLS.
4. ◁4▷ CATALOG # PUADP-1 ADAPTOR IS REQUIRED TO USE "U" DIES IN Y46 SERIES TOOLS.
5. ◁5▷ NAVY CABLE SIZE MAY BE OMITTED ON SOME SIZES BECAUSE OF SPACE LIMITATIONS.
6. DIMENSIONS, METRIC WIRE, & METRIC BOLT SIZES IN BRACKETS [ ] ARE IN MILLIMETERS. DIMENSIONS ARE ROUNDED OFF TO THE NEAREST MILLIMETER, UNLESS OTHEWISE NOTED, AND ARE FOR REFERENCE ONLY.
7. ◁7▷ FOR USE BY CUSTOMERS THAT HAVE THIS HYPRESS.™ NO NEW Y34A HYPRESS™ ARE BEING PROCESSED.

REV.	DATE	DESCRIPTION	BY	C'K'D.
0	11/13/98	RELEASED PER ECO 4612.	DB	KH

HYLUG™

CAT NO: YAZ1C-2TC- (SEE TABLE) — SCALE NTS

DRAWN: D. BOISVERT 11/13/98 — CHECKED: K.HENRY 12/03/98

DSGN APPVL: B. MACDONALD 12/02/98 — MFG APPVL: N/A

Q.A. APPVL: S. GRAY 11/30/98 — MKTG APPVL: B. HARGROVE 11/25/98

CAD FILE: SE211915-19_0 — PM REF: N/A

MDL REF: N/A

PROJECT: .

FRAMATOME CONNECTORS USA INC.
BURNDY ELECTRICAL
MANCHESTER, NH 03108
U. S. A.
1-800-346-4175
FCI

DRAWING NO. SE211915 — REV 0

SHEET 19 OF 36

REV. 061995

SE211915

CATALOG NO.	CONDUCTOR CODE (AWG)	CONDUCTOR NAVY ⟨5⟩	BOLT SIZE	FIG. NO.	B ±.06	C ±.04	E ±.02	H REF.	K DIA. ±.02	L ±.09	N ±.04	O.D. ±.01	T REF.	Y MIN.	INSTALLATION TOOLING (# CRIMPS) DIE INDEX	COLOR CODE	MECHANICAL RATCHET MD7-34R MD6	MECHANICAL RATCHET OUR840	MECHANICAL RATCHET Y2MR	HYDRAULIC Y34A ⟨7⟩	HYDRAULIC Y750 Y35, BAT35 Y39, BAT750	HYDRAULIC Y46 ⟨4⟩	HYDRAULIC Y45 ⟨3⟩	DIELESS (# CRIMPS)	WIRE STRIP LENGTH
YAZ25-2TC14	1/0 AWG [----]	100	1/4 [M6]	1	1.38 [35]	.75 [19]	.62 [16]	----	.27 [7]	3.04 [77]	.31 [8]	.51 [12]	.12 [3]	.96 [24]	12 OR 348	PINK	W25VT W25RT (4)	W25VT W25RT (4)	----	A25R A2CAB (2)	U25RT U2CABT (2)	U25RT U2CABT (2)	U25RT U2CABT (2)	MECHANICAL: MY29-11 (1) HYDRAULIC: Y644, Y644M Y644MBH, Y1000 Y1000BH (1)	1-7/16
YAZ25-2TC14-45				2				1.63 [41]		2.81 [71]															
YAZ25-2TC14-90				3				1.96 [50]		1.64 [42]															
YAZ25-2TC14E2			1/4 [M6]	1			.75 [19]	----		3.16 [80]				1.09 [28]											
YAZ25-2TC14E2-45				2				1.63 [41]		2.93 [74]							W25VT W25RT (4)	W25VT W25RT (4)		A25R A2CAB (2)	U25RT U2CABT (2)	U25RT U2CABT (2)	U25RT U2CABT (2)		
YAZ25-2TC14E2-90	1/0 AWG [----]	100		3	1.38 [35]	.75 [19]		1.96 [50]	.27 [7]	1.76 [45]	.31 [8]	.51 [12]	.12 [3]		12 OR 348	PINK			----						1-7/16

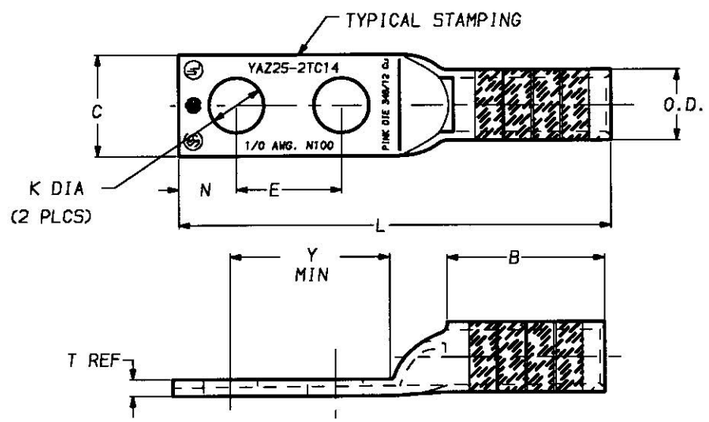

FIG 1

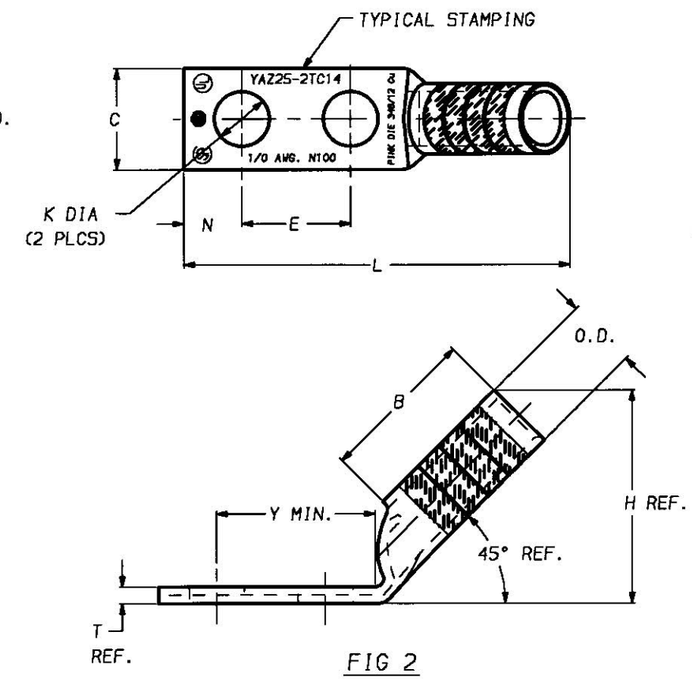

FIG 2

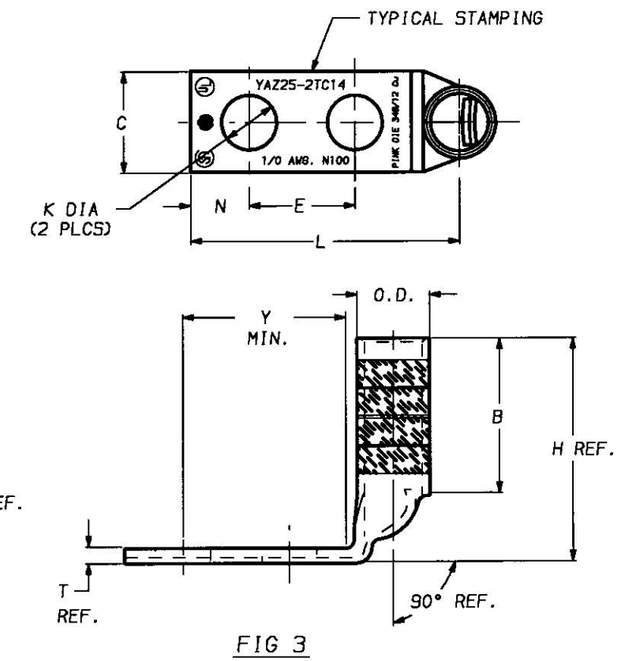

FIG 3

NOTES:

1. MATERIAL: COPPER TUBING.
2. FINISH: TIN PLATED
3. ⟨3⟩ CATALOG # PT6515 ADAPTOR IS REQUIRED TO USE "U" DIES IN Y45 SERIES TOOLS.
4. ⟨4⟩ CATALOG # PUADP-1 ADAPTOR IS REQUIRED TO USE "U" DIES IN Y46 SERIES TOOLS.
5. ⟨5⟩ NAVY CABLE SIZE MAY BE OMITTED ON SOME SIZES BECAUSE OF SPACE LIMITATIONS.
6. DIMENSIONS, METRIC WIRE, & METRIC BOLT SIZES IN BRACKETS [ ] ARE IN MILLIMETERS. DIMENSIONS ARE ROUNDED OFF TO THE NEAREST MILLIMETER, UNLESS OTHEWISE NOTED, AND ARE FOR REFERENCE ONLY.
7. ⟨7⟩ FOR USE BY CUSTOMERS THAT HAVE THIS HYPRESS.™ NO NEW Y34A HYPRESS™ ARE BEING PROCESSED.

REV.	DATE	DESCRIPTION	BY	C'K'D.
0	11/13/98	RELEASED PER ECO 4612	DB	KH

HYLUG™

CAT NO. YAZ25-2TC-(SEE TABLE) — SCALE NTS

DRAWN: D. BOISVERT 11/12/98 — CHECKED: K. HENRY 12/03/98
DSGN APPVL: B. MACDONALD 12/02/98 — MFG APPVL: N/A
Q.A. APPVL: S. GRAY 11/30/98 — MKTG APPVL: B HARGROVE 11/25/98
CAD FILE: SE211915-20_0 — PM REF: N/A
MDL REF: N/A
PROJECT: .

FRAMATOME CONNECTORS USA INC.
BURNDY ELECTRICAL
MANCHESTER, NH 03108
U. S. A.
1-800-346-4175
FCI

DRAWING NO. SE211915 — REV 0
SHEET 20 OF 36

REV: 061995

SE211915

CATALOG NO.	CONDUCTOR CODE (AWG)	CONDUCTOR NAVY ◁5	BOLT SIZE	FIG. NO.	B ±.06	C ±.04	E ±.02	H REF.	K DIA. ±.02	L ±.09	N ±.04	O.D. ±.01	T REF.	Y MIN.	DIE INDEX	COLOR CODE	MECHANICAL RATCHET MD7-34R MD6	MECHANICAL RATCHET OUR840	MECHANICAL RATCHET Y2MR	HYDRAULIC Y34A ◁7	HYDRAULIC Y750 Y35, BAT35 Y39, BAT750	HYDRAULIC Y46 ◁4	HYDRAULIC Y45 ◁3	DIELESS (# CRIMPS)	WIRE STRIP LENGTH
YAZ25-2TC14E1	1/0 AWG [----]	100	1/4 [M6]	1	1.38 [35]	.75 [19]	1.00 [25]	----	.27 [7]	3.41 [87]	.31 [8]	.51 [13]	.12 [3]	1.34 [34]	12 OR 348	PINK	W25VT W25RT (4)	W25VT W25RT (4)	----	A25R A2CAB (2)	U25RT U2CABT (2)	U25RT U2CABT (2)	U25RT U2CABT (2)	MECHANICAL: MY29-11 (1)	1-7/16
YAZ25-2TC14E1-45				2				1.63 [41]		3.18 [81]															
YAZ25-2TC14E1-90				3				1.96 [50]		2.01 [51]														HYDRAULIC: Y644, Y644M Y644MBH, Y1000 Y1000BH (1)	
YAZ25-2TC516E6			5/16 [M8]	1			.88 [22]	----	.33 [8]	3.35 [85]	.34 [9]			1.24 [31]											
YAZ25-2TC516E6-45				2				1.63 [41]		3.12 [79]															
YAZ25-2TC516E6-90	1/0 AWG [----]	100		3	1.38 [35]	.75 [19]		1.96 [50]		1.95 [50]		.51 [13]	.12 [3]		12 OR 348	PINK	W25VT W25RT (4)	W25VT W25RT (4)	----	A25R A2CAB (2)	U25RT U2CABT (2)	U25RT U2CABT (2)	U25RT U2CABT (2)		1-7/16

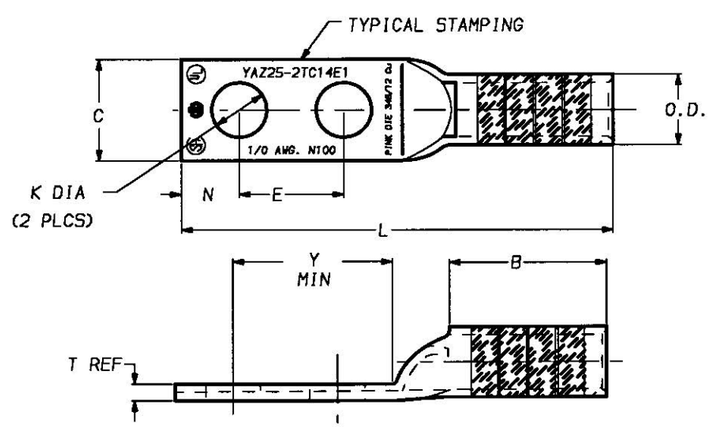

FIG 1

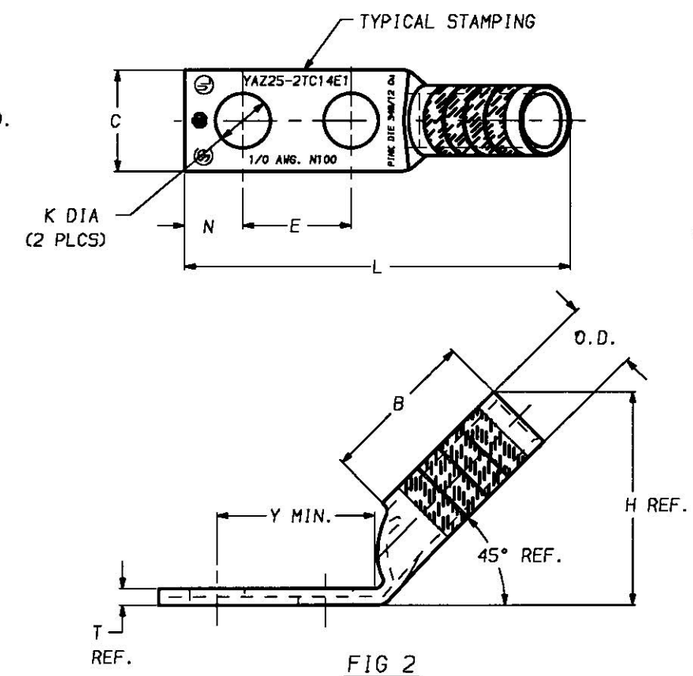

FIG 2

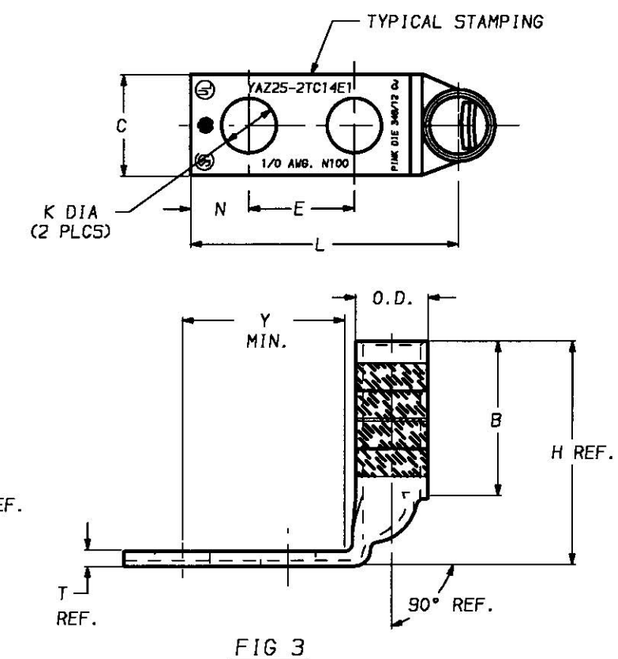

FIG 3

NOTES:

1. MATERIAL: COPPER TUBING.
2. FINISH: TIN PLATED
3. ◁3 CATALOG # PT6515 ADAPTOR IS REQUIRED TO USE "U" DIES IN Y45 SERIES TOOLS.
4. ◁4 CATALOG # PUADP-1 ADAPTOR IS REQUIRED TO USE "U" DIES IN Y46 SERIES TOOLS.
5. ◁5 NAVY CABLE SIZE MAY BE OMITTED ON SOME SIZES BECAUSE OF SPACE LIMITATIONS.
6. DIMENSIONS, METRIC WIRE, & METRIC BOLT SIZES IN BRACKETS [ ] ARE IN MILLIMETERS. DIMENSIONS ARE ROUNDED OFF TO THE NEAREST MILLIMETER, UNLESS OTHEWISE NOTED, AND ARE FOR REFERENCE ONLY.
7. ◁7 FOR USE BY CUSTOMERS THAT HAVE THIS HYPRESS.™ NO NEW Y34A HYPRESS™ ARE BEING PROCESSED.

REV.	DATE	DESCRIPTION	BY	C'K'D.
0	11/16/98	RELEASE PER ECO 4612.	DB	KH

HYLUG™

CAT NO. YAZ25-2TC-(SEE TABLE) — SCALE NTS

DRAWN. D. BOISVERT 11/12/98 — CHECKED. K. HENRY 12/03/98

DSGN APPVL. B. MACDONALD 12/02/98 — MFG APPVL. N/A

Q.A. APPVL. S. GRAY 11/30/98 — MKTG APPVL. B. HARGROVE 11/25/98

CAD FILE. SE211915-21_0 — PM REF. N/A

MDL REF. N/A

PROJECT. .

FRAMATOME CONNECTORS USA INC.
BURNDY ELECTRICAL
MANCHESTER, NH 03108
U. S. A.
1-800-346-4175

DRAWING NO. SE211915 — REV 0

SHEET 21 OF 36

REV. 061995

SE211915

CATALOG NO.	CONDUCTOR CODE (AWG)	CONDUCTOR NAVY ◁5	BOLT SIZE	FIG. NO.	B ±.06	C ±.04	E ±.02	H REF.	K DIA. ±.02	L ±.09	N ±.04	O.D. ±.01	T REF.	Y MIN.	INSTALLATION TOOLING (# CRIMPS): DIE INDEX	COLOR CODE	MECHANICAL RATCHET: MD7-34R MD6	MECHANICAL RATCHET: OUR840	MECHANICAL RATCHET: Y2MR	HYDRAULIC: Y34A ◁7	HYDRAULIC: Y750 Y35, BAT35 Y39, BAT750	HYDRAULIC: Y46 ◁4	HYDRAULIC: Y45 ◁3	DIELESS (# CRIMPS)	WIRE STRIP LENGTH
YAZ25-2TC516	1/0 AWG [----]	100	5/16 [M8]	1	1.38 [35]	.75 [19]	1.00 [25]	----	.33 [8]	3.47 [88]	.34 [9]	.51 [13]	.12 [3]	1.37 [35]	12 OR 348	PINK	W25VT W25RT (4)	W25VT W25RT (4)	----	A25R A2CAB (2)	U25RT U2CABT (2)	U25RT U2CABT (2)	U25RT U2CABT (2)	MECHANICAL: MY29-11 (1) HYDRAULIC: Y644, Y644M Y644MBH, Y1000 Y1000BH (1)	1-7/16
YAZ25-2TC516-45				2				1.63 [41]		3.24 [82]															
YAZ25-2TC516-90				3				1.96 [50]		2.08 [53]															
YAZ25-2TC38			3/8 [M10]	1				----	.40 [10]	3.60 [91]	.41 [10]			1.43 [36]											
YAZ25-2TC38-45				2				1.63 [41]		3.37 [86]							W25VT W25RT (4)	W25VT W25RT (4)		A25R A2CAB (2)	U25RT U2CABT (2)	U25RT U2CABT (2)	U25RT U2CABT (2)		
YAZ25-2TC38-90	1/0 AWG [----]	100		3	1.38 [35]	.75 [19]	1.00 [25]	1.96 [50]		2.20 [56]		.51 [13]	.12 [3]		12 OR 348	PINK			----						1-7/16

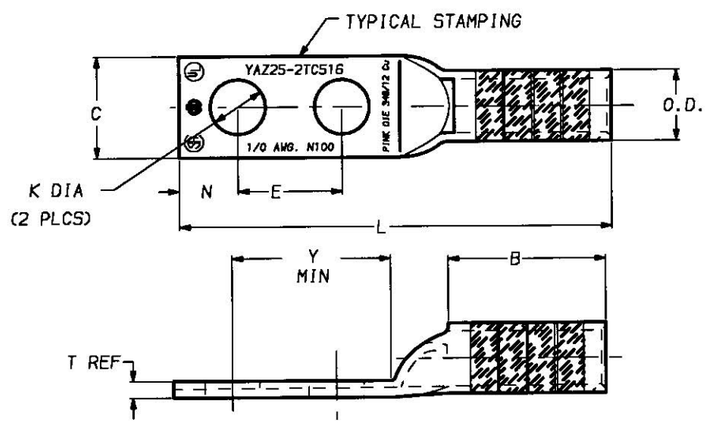

FIG 1

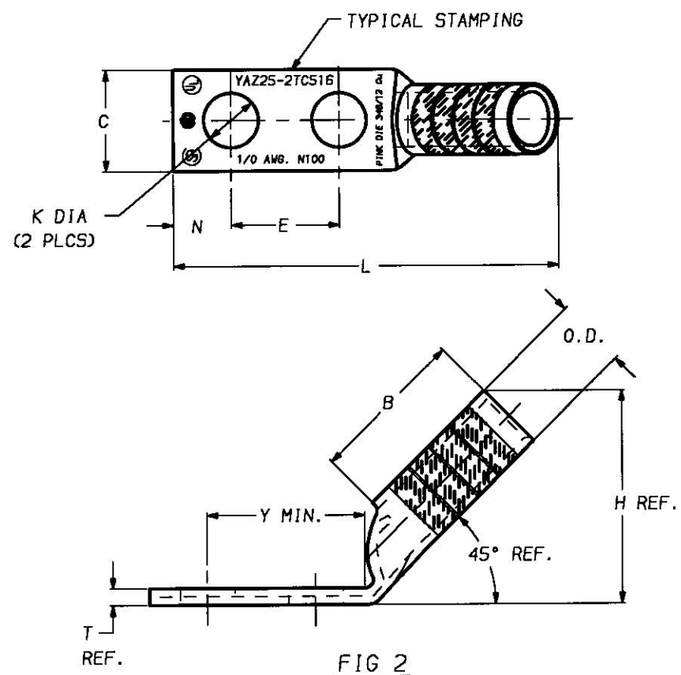

FIG 2

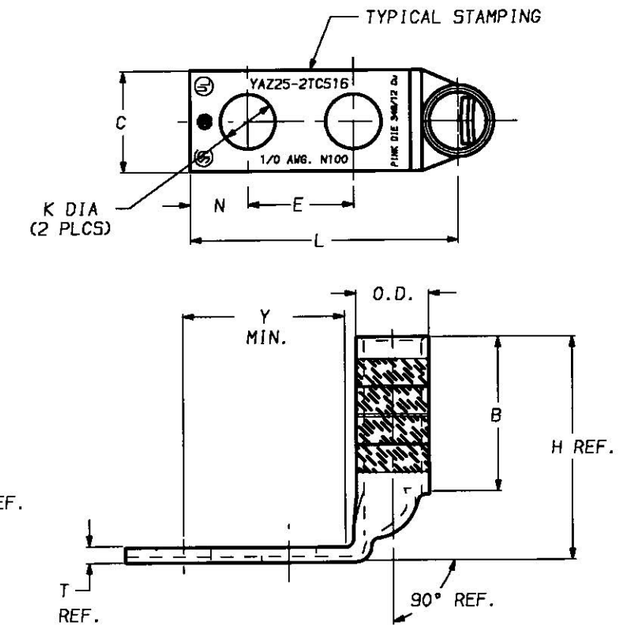

FIG 3

NOTES:

1. MATERIAL: COPPER TUBING.
2. FINISH: TIN PLATED
3. ◁3 CATALOG # PT6515 ADAPTOR IS REQUIRED TO USE "U" DIES IN Y45 SERIES TOOLS.
4. ◁4 CATALOG # PUADP-1 ADAPTOR IS REQUIRED TO USE "U" DIES IN Y46 SERIES TOOLS.
5. ◁5 NAVY CABLE SIZE MAY BE OMITTED ON SOME SIZES BECAUSE OF SPACE LIMITATIONS.
6. DIMENSIONS, METRIC WIRE, & METRIC BOLT SIZES IN BRACKETS [ ] ARE IN MILLIMETERS. DIMENSIONS ARE ROUNDED OFF TO THE NEAREST MILLIMETER, UNLESS OTHEWISE NOTED, AND ARE FOR REFERENCE ONLY.
7. ◁7 FOR USE BY CUSTOMERS THAT HAVE THIS HYPRESS.™ NO NEW Y34A HYPRESS™ ARE BEING PROCESSED.

REV.	DATE	DESCRIPTION	BY	C'K'D.
0	11/17/98	RELEASED PER ECO 4612.	DB	KH

HYLUG™

CAT NO: YAZ25-2TC-(SEE TABLE) — SCALE NTS

DRAWN: D. BOISVERT 11/12/98 — CHECKED: K. HENRY 12/03/98
DSGN APPVL: B. MACDONALD 12/02/98 — MFG APPVL: N/A
Q.A. APPVL: S. GRAY 11/30/98 — MKTG APPVL: B. HARGROVE 11/25/98
CAD FILE: SE211915-22_0 — PM REF: N/A
MDL REF: N/A
PROJECT: .

FRAMATOME CONNECTORS USA INC.
BURNDY ELECTRICAL
FCI
MANCHESTER, NH 03108
U. S. A.
1-800-346-4175

DRAWING NO. SE211915 — REV 0
SHEET 22 OF 36

REV: 061995

DRAWING NO. SE211915

CATALOG NO.	CONDUCTOR CODE (AWG)	CONDUCTOR NAVY ◁5	BOLT SIZE	FIG. NO.	B ±.06	C ±.04	E ±.02	H REF.	K DIA. ±.02	L ±.09	N ±.04	O.D. ±.01	T REF.	Y MIN.	DIE INDEX	COLOR CODE	MECHANICAL RATCHET MD7-34R MD6	MECHANICAL RATCHET OUR840	MECHANICAL RATCHET Y2MR	HYDRAULIC Y34A ◁7	HYDRAULIC Y750 Y35, BAT35 Y39, BAT750	HYDRAULIC Y46 ◁4	HYDRAULIC Y45 ◁3	DIELESS (# CRIMPS)	WIRE STRIP LENGTH
					DIMENSIONS										INSTALLATION TOOLING (# CRIMPS)										
YAZ25-2NTC38	1/0 AWG [----]	100	3/8 [M10]	1	1.38 [35]	.75 [19]	1.75 [44]	----	.40 [10]	4.35 [110]	.41 [10]	.51 [13]	.12 [3]	2.18 [55]	12 OR 348	PINK	W25VT W25RT (4)	W25VT W25RT (4)	----	A25R A2CAB (2)	U25RT U2CABT (2)	U25RT U2CABT (2)	U25RT U2CABT (2)	MECHANICAL: MY29-11 (1) HYDRAULIC: Y644, Y644M Y644MBH, Y1000 Y1000BH (1)	1-7/16
YAZ25-2NTC38-45				2				1.63 [41]		4.12 [105]															
YAZ25-2NTC38-90				3				1.96 [50]		2.95 [75]															
YAZ25-2NTC			1/2 [M12]	1				----	.56 [14]	4.79 [122]	.62 [16]			2.40 [61]											
YAZ25-2NTC-45				2				1.63 [41]		4.53 [115]		.51 [13]	.12 [3]		12 OR 348	PINK	W25VT W25RT (4)	W25VT W25RT (4)	----	A25R A2CAB (2)	U25RT U2CABT (2)	U25RT U2CABT (2)	U25RT U2CABT (2)		
YAZ25-2NTC-90	1/0 AWG [----]	100		3	1.38 [35]	.75 [19]	1.75 [44]	1.96 [50]		3.38 [86]															1-7/16

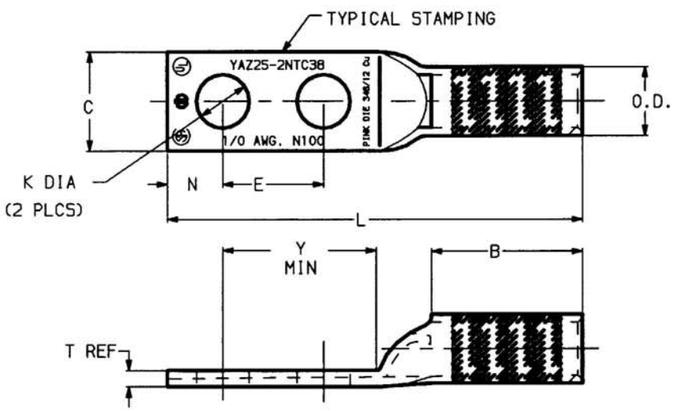

FIG 1

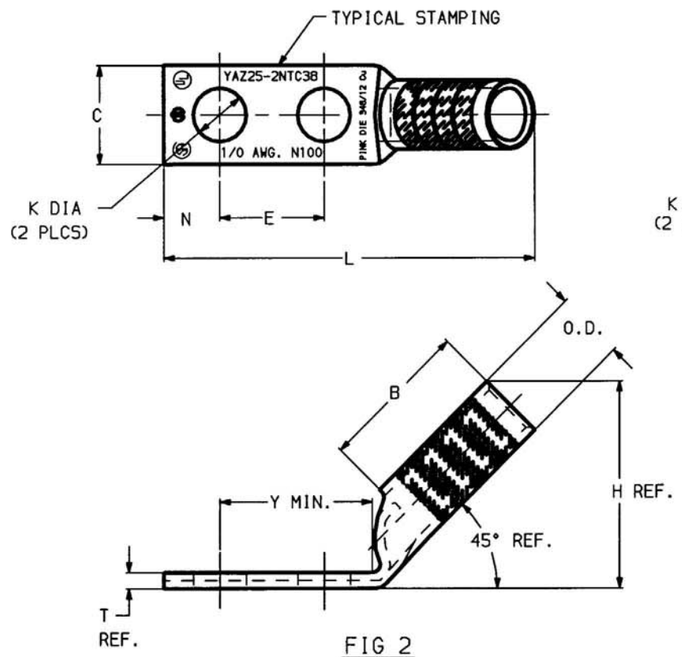

FIG 2

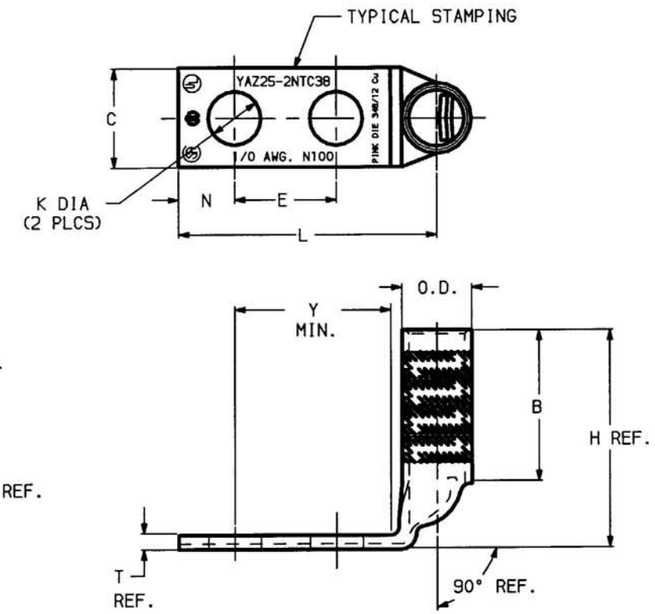

FIG 3

NOTES:

1. MATERIAL: COPPER TUBING.
2. FINISH: TIN PLATED
3. ◁3 CATALOG # PT6515 ADAPTOR IS REQUIRED TO USE "U" DIES IN Y45 SERIES TOOLS.
4. ◁4 CATALOG # PUADP-1 ADAPTOR IS REQUIRED TO USE "U" DIES IN Y46 SERIES TOOLS.
5. ◁5 NAVY CABLE SIZE MAY BE OMITTED ON SOME SIZES BECAUSE OF SPACE LIMITATIONS.
6. DIMENSIONS, METRIC WIRE, & METRIC BOLT SIZES IN BRACKETS [ ] ARE IN MILLIMETERS. DIMENSIONS ARE ROUNDED OFF TO THE NEAREST MILLIMETER, UNLESS OTHEWISE NOTED, AND ARE FOR REFERENCE ONLY.
7. ◁7 FOR USE BY CUSTOMERS THAT HAVE THIS HYPRESS.™ NO NEW Y34A HYPRESS™ ARE BEING PROCESSED.

REV.	DATE	DESCRIPTION	BY	C'K'D.
1	6/04/01	ADD CAT #'S YAZ25-2NTC, -45, -90 TO TABLE PER ECO 6481.	DB	PL

TO ORDER BURNDY PRODUCTS CALL 1-800-346-4175
MANCHESTER, NH 03109, USA
FOR PRODUCT INFO = http://www.fciconnect.com

HYLUG™

CAT NO: YAZ25-2NTC38 (TABLE)

SCALE NTS

DRAWN: D.BOISVERT 11/9/98 CHECKED: K.HENRY 12/03/98
DSGN APPVL: B.MACDONALD 12/02/98 MFG APPVL: N/A
Q.A. APPVL: S.GRAY 11/30/98
MKTG APPVL: N/A
CAD FILE: SE211915-23_1
MDL REF: N/A

FCI FRAMATOME GROUP
BURNDY . RACINE . MALICO . SAAE Products

DRAWING NO. SE211915 REV 1

SHEET 23 OF 36

REV: 061995

DRAWING NO. SE211915

CATALOG NO.	CONDUCTOR CODE (AWG)	CONDUCTOR NAVY ⟨5⟩	BOLT SIZE	FIG. NO.	B ±.08	C ±.04	E ±.02	H REF.	K DIA. ±.02	L ±.12	N ±.04	O.D. ±.01	T REF.	Y MIN.	DIE INDEX	COLOR CODE	MECHANICAL RATCHET MD7-34R MD6	MECHANICAL RATCHET OUR840	MECHANICAL RATCHET Y2MR	HYDRAULIC Y34A ⟨7⟩	HYDRAULIC Y750 Y35, BAT35 Y39, BAT750	HYDRAULIC Y46 ⟨4⟩	HYDRAULIC Y45 ⟨3⟩	DIELESS (# CRIMPS)	WIRE STRIP LENGTH
YAZ26-2TC14	2/0 AWG [70mm² STR]	125	1/4 [M6]	1	1.50 [38]	.83 [21]	.62 [16]	----	.27 [7]	3.20 [81]	.31 [8]	.56 [14]	.12 [3]	.96 [24]	13	BLACK	W26VT W26RT (4)	W26VT W26RT (4)	----	A26R (2)	U26RT (2)	U26RT (2)	U26RT (2)	MECHANICAL: MY29-11 (1) HYDRAULIC: Y644, Y644M Y644MBH, Y1000 Y1000BH (1)	1-9/16
YAZ26-2TC14-45				2				1.78 [45]		2.92 [74]															
YAZ26-2TC14-90				3				2.12 [54]		1.66 [42]															
YAZ26-2TC14E2				1			.75 [19]	----		3.32 [84]				1.09 [28]											
YAZ26-2TC14E2-45				2				1.78 [45]		3.05 [77]															
YAZ26-2TC14E2-90				3		.83 [21]		2.12 [54]		1.79 [45]															
YAZ26-2NT14				1		.75 [19]	.62 [16]	----		3.20 [81]															
YAZ26-2NT14-45				2				1.78 [45]		2.92 [74]															
YAZ26-2NT14-90	2/0 AWG [70mm² STR]	125	1/4 [M6]	3	1.50 [38]			2.12 [54]	.27 [7]	1.66 [42]	.31 [8]	.56 [14]	.12 [3]	1.09 [28]	13	BLACK	W26VT W26RT (4)	W26VT W26RT (4)	----	A26R (2)	U26RT (2)	U26RT (2)	U26RT (2)		1-9/16

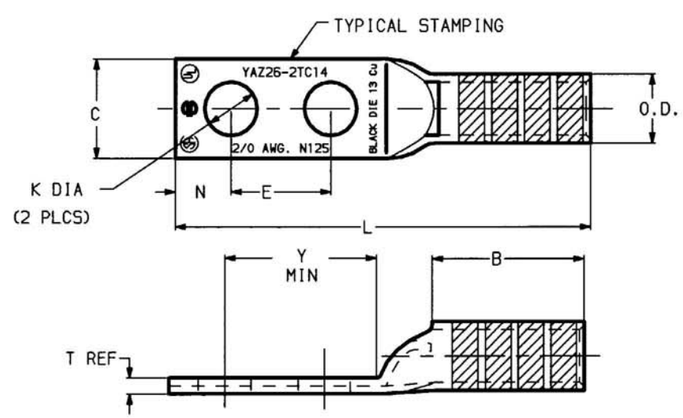

FIG 1

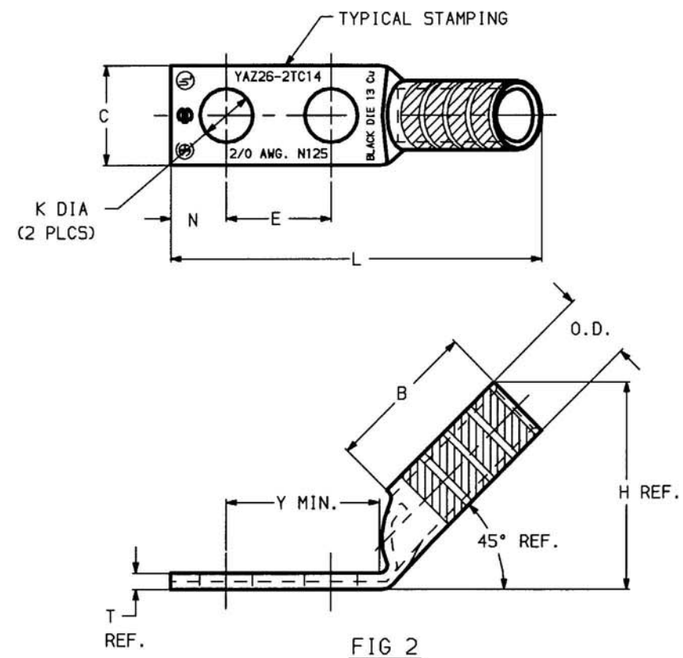

FIG 2

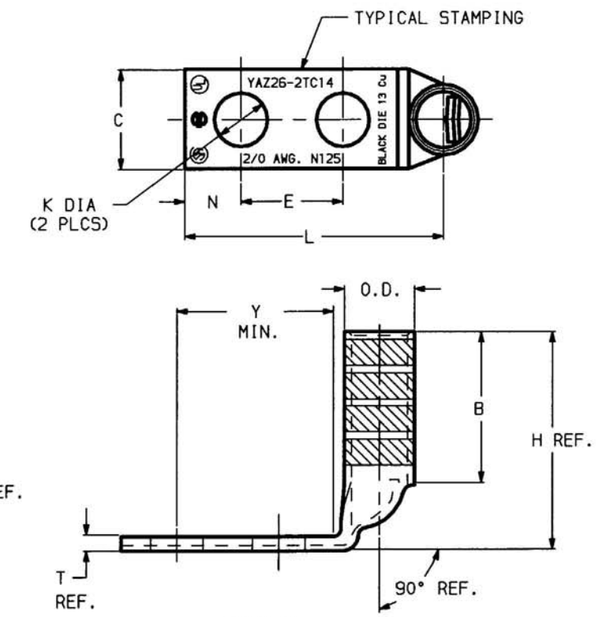

FIG 3

NOTES:

1. MATERIAL: COPPER TUBING.
2. FINISH: TIN PLATED
3. ⟨3⟩ CATALOG # PT6515 ADAPTOR IS REQUIRED TO USE "U" DIES IN Y45 SERIES TOOLS.
4. ⟨4⟩ CATALOG # PUADP-1 ADAPTOR IS REQUIRED TO USE "U" DIES IN Y46 SERIES TOOLS.
5. ⟨5⟩ NAVY CABLE SIZE MAY BE OMITTED ON SOME SIZES BECAUSE OF SPACE LIMITATIONS.
6. DIMENSIONS, METRIC WIRE, & METRIC BOLT SIZES IN BRACKETS [ ] ARE IN MILLIMETERS. DIMENSIONS ARE ROUNDED OFF TO THE NEAREST MILLIMETER, UNLESS OTHEWISE NOTED, AND ARE FOR REFERENCE ONLY.
7. ⟨7⟩ FOR USE BY CUSTOMERS THAT HAVE THIS HYPRESS.™ NO NEW Y34A HYPRESS™ ARE BEING PROCESSED.

REV.	DATE	DESCRIPTION	ECO	BY	C'K'D.
1	6/2/01	ADDED CAT. # YAZ26-2NT14, YAZ26-2NT14-45 & YAZ26-2NT14-90	6604	PL	DB

TO ORDER BURNDY PRODUCTS CALL 1-800-346-4175
MANCHESTER, NH 03109, USA
FOR PRODUCT INFO = http://www.fciconnect.com

HYLUG™

CAT NO: YAZ26-2--- (TABLE)			SCALE NTS
DRAWN: D BOISVERT	11/12/98	CHECKED: K HENRY	12/3/98
DSGN APPVL: B MACDONALD	11/30/98	MFG APPVL: N/A	
		Q.A. APPVL: S GRAY	11/30/98
		MKTG APPVL: N/A	
		CAD FILE: SE211915-24_1	
		MDL REF: N/A	

FCI FRAMATOME GROUP
BURNDY . RACINE . MALICO . BAAE Products

DRAWING NO. SE211915 REV 1
SHEET 24 OF 36

REV: 012000

DRAWING NO. SE211915

CATALOG NO.	CONDUCTOR CODE (AWG)	CONDUCTOR NAVY ⟨5⟩	BOLT SIZE	FIG. NO.	B ±.08	C ±.04	E ±.02	H REF.	K DIA. ±.02	L ±.12	N ±.04	O.D. ±.01	T REF.	Y MIN.	DIE INDEX	COLOR CODE	MECHANICAL RATCHET MD7-34R MD6	MECHANICAL RATCHET OUR840	MECHANICAL RATCHET Y2MR	HYDRAULIC Y34A ⟨7⟩	HYDRAULIC Y750 Y35, BAT35 Y39, BAT750	HYDRAULIC Y46 ⟨4⟩	HYDRAULIC Y45 ⟨3⟩	DIELESS (# CRIMPS)	WIRE STRIP LENGTH
YAZ26-2TC38	2/0 AWG [70mm² STR]	125	3/8 [M10]	1	1.50 [38]	.83 [21]	1.00 [25]	----	.40 [10]	3.76 [96]	.41 [10]	.56 [14]	.12 [3]	1.43 [36]	13	BLACK	W26VT W26RT (4)	W26VT W26RT (4)	----	A26R (2)	U26RT (2)	U26RT (2)	U26RT (2)	MECHANICAL: MY29-11 (1) HYDRAULIC: Y644, Y644M Y644MBH, Y1000 Y1000BH (1)	1-9/16
YAZ26-2TC38-45				2				1.78 [45]		3.48 [88]															
YAZ26-2TC38-90				3				2.12 [54]		2.22 [56]															
YAZ26-2NTC			1/2 [M12]	1			1.75 [44]	----	.56 [14]	4.95 [30]	.62 [16]			2.40 [61]											
YAZ26-2NTC-45				2				1.78 [45]		4.67 [119]							W26VT W26RT (4)	W26VT W26RT (4)							
YAZ26-2NTC-90	2/0 AWG [70mm² STR]	125		3	1.50 [38]	.83 [21]		2.12 [54]		3.41 [87]		.56 [14]	.12 [3]		13	BLACK			----	A26R (2)	U26RT (2)	U26RT (2)	U26RT (2)		1-9/16

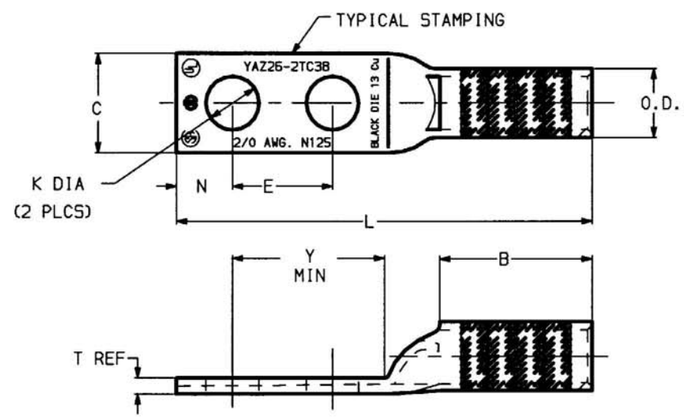

FIG 1

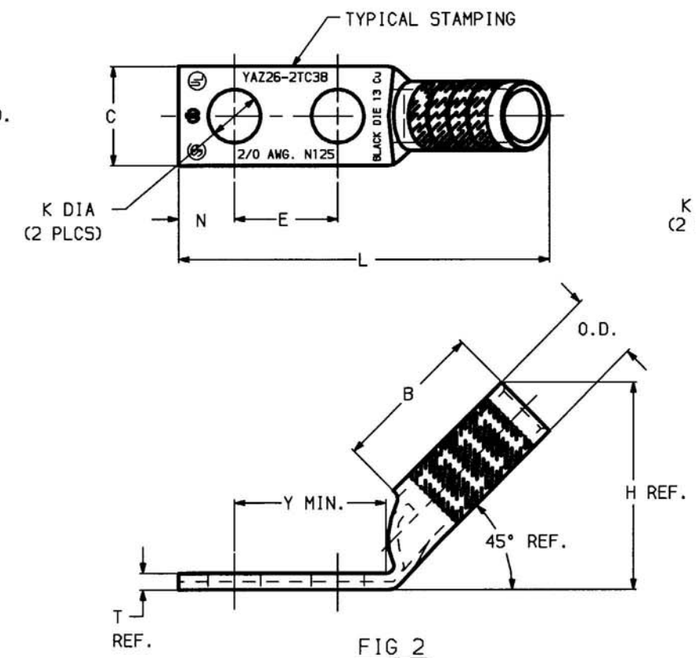

FIG 2

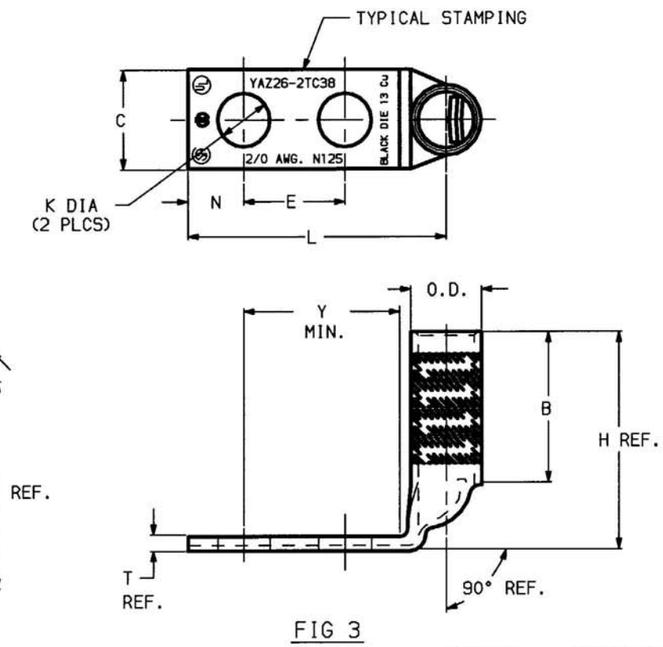

FIG 3

NOTES:

1. MATERIAL: COPPER TUBING.
2. FINISH: TIN PLATED
3. ⟨3⟩ CATALOG # PT6515 ADAPTOR IS REQUIRED TO USE "U" DIES IN Y45 SERIES TOOLS.
4. ⟨4⟩ CATALOG # PUADP-1 ADAPTOR IS REQUIRED TO USE "U" DIES IN Y46 SERIES TOOLS.
5. ⟨5⟩ NAVY CABLE SIZE MAY BE OMITTED ON SOME SIZES BECAUSE OF SPACE LIMITATIONS.
6. DIMENSIONS, METRIC WIRE, & METRIC BOLT SIZES IN BRACKETS [ ] ARE IN MILLIMETERS. DIMENSIONS ARE ROUNDED OFF TO THE NEAREST MILLIMETER, UNLESS OTHEWISE NOTED, AND ARE FOR REFERENCE ONLY.
7. ⟨7⟩ FOR USE BY CUSTOMERS THAT HAVE THIS HYPRESS.™ NO NEW Y34A HYPRESS™ ARE BEING PROCESSED.

REV.	DATE	DESCRIPTION	ECO	BY	C'K'D.
1	6/04/01	ADD CAT.#'S YAZ26-2NTC, -45, -90 TO TABLE.	6481	DB	PL

TO ORDER BURNDY PRODUCTS CALL 1-800-346-4175
MANCHESTER, NH 03109, USA
FOR PRODUCT INFO = http://www.fciconnect.com

HYLUG™

CAT NO: YAZ26-2TC-, -2NTC (TABLE) — SCALE NTS

DRAWN: D.BOISVERT 11/12/98 — CHECKED: K.HENRY 12/03/98
DSGN APPVL: B.MACDONALD 12/02/98 — MFG APPVL: N/A
Q.A. APPVL: S.GRAY 11/30/98
MKTG APPVL: B.HARDGROVE 11/25/98
CAD FILE: SE211915-25_1
MDL REF: N/A

FCI FRAMATOME GROUP
BURNDY . RACINE . MALICO . SAAE Products

DRAWING NO. SE211915 — REV 1
SHEET 25 OF 36

REV. 061995

DRAWING NO. SE211915

CATALOG NO.	CONDUCTOR CODE (AWG)	CONDUCTOR NAVY ⟨5⟩	BOLT SIZE	FIG. NO.	B ±.08	C ±.04	E ±.02	H REF.	K DIA. ±.02	L ±.12	N ±.04	O.D. ±.01	T REF.	Y MIN.	DIE INDEX	COLOR CODE	MECHANICAL RATCHET MD7-34R MD6	MECHANICAL RATCHET OUR840	MECHANICAL RATCHET Y2MR	HYDRAULIC Y34A ⟨7⟩	HYDRAULIC Y750 Y35, BAT35 Y39, BAT750	HYDRAULIC Y46 ⟨4⟩	HYDRAULIC Y45 ⟨3⟩	DIELESS (# CRIMPS)	WIRE STRIP LENGTH
YAZ27-2TC14E2	3/0 AWG [----]	150	1/4 [M6]	1	1.50 [38]	.90 [23]	.75 [19]	----	.27 [7]	3.36 [85]	.31 [8]	.62 [16]	.12 [3]	1.09 [28]	14	ORANGE	W27VT W27RT (4)	W27VT W27RT (4)	----	A27R (2)	U27RT (2)	U27RT (2)	U27RT (2)	MECHANICAL: MY29-11 (1) HYDRAULIC: Y644, Y644M Y644MBH, Y1000 Y1000BH (1)	1-9/16
YAZ27-2TC14E2-45				2				1.84 [47]		3.08 [78]															
YAZ27-2TC14E2-90				3				2.16 [55]		1.82 [46]															
YAZ27-2TC38			3/8 [M10]	1			1.00 [25]	----	.40 [10]	3.80 [97]	.41 [10]			1.43 [36]											
YAZ27-2TC38-45				2				1.84 [47]		3.52 [89]															
YAZ27-2TC38-90				3				2.16 [55]		2.25 [57]															
YAZ27-2NTC			1/2 [M12]	1			1.75 [44]	----	.56 [14]	4.99 [127]	.62 [16]			2.40 [61]											
YAZ27-2NTC-45				2				1.84 [47]		4.71 [120]							W27VT W27RT (4)	W27VT W27RT (4)		A27R (2)	U27RT (2)	U27RT (2)	U27RT (2)		
YAZ27-2NTC-90	3/0 AWG [----]	150		3	1.50 [38]	.90 [23]		2.16 [55]		3.44 [87]		.62 [16]	.12 [3]		14	ORANGE			----						1-9/16

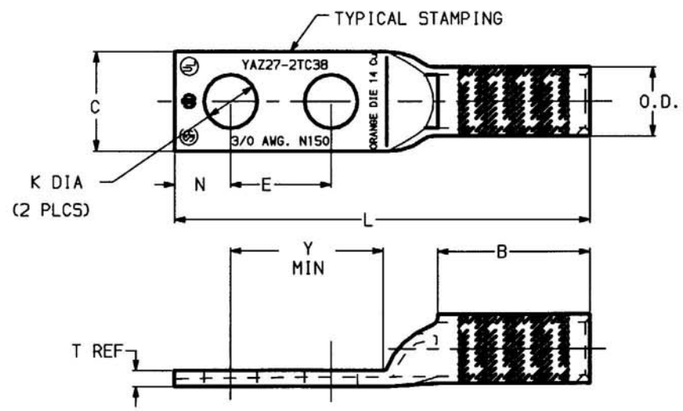

FIG 1

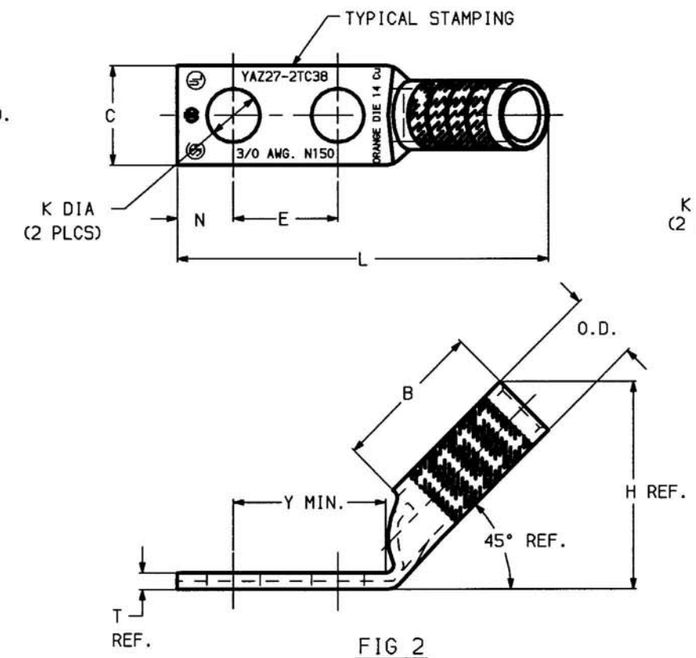

FIG 2

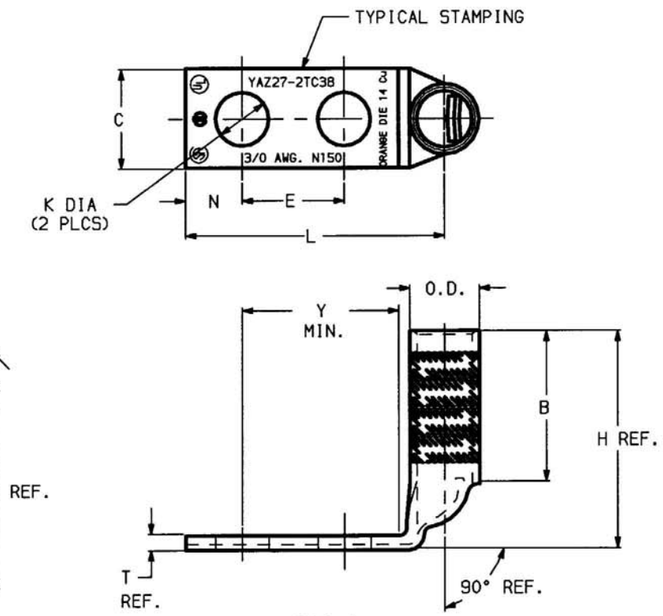

FIG 3

NOTES:

1. MATERIAL: COPPER TUBING.
2. FINISH: TIN PLATED
3. ⟨3⟩ CATALOG # PT6515 ADAPTOR IS REQUIRED TO USE "U" DIES IN Y45 SERIES TOOLS.
4. ⟨4⟩ CATALOG # PUADP-1 ADAPTOR IS REQUIRED TO USE "U" DIES IN Y46 SERIES TOOLS.
5. ⟨5⟩ NAVY CABLE SIZE MAY BE OMITTED ON SOME SIZES BECAUSE OF SPACE LIMITATIONS.
6. DIMENSIONS, METRIC WIRE, & METRIC BOLT SIZES IN BRACKETS [ ] ARE IN MILLIMETERS. DIMENSIONS ARE ROUNDED OFF TO THE NEAREST MILLIMETER, UNLESS OTHEWISE NOTED, AND ARE FOR REFERENCE ONLY.
7. ⟨7⟩ FOR USE BY CUSTOMERS THAT HAVE THIS HYPRESS.™ NO NEW Y34A HYPRESS™ ARE BEING PROCESSED.

REV.	DATE	DESCRIPTION	ECO	BY	C'K'D.
1	6/04/01	ADD CAT.#'S YAZ27-2NTC, -45, -90 TO TABLE.	6481	DB	PL

TO ORDER BURNDY PRODUCTS CALL 1-800-346-4175
MANCHESTER, NH 03109, USA
FOR PRODUCT INFO = http://www.fciconnect.com

HYLUG™

CAT NO: YAZ27-2TC-, -2NTC- (TABLE)

SCALE NTS

DRAWN: D.BOISVERT 11/12/98
CHECKED: K.HENRY 12/03/98
DSGN APPVL: B.MACDONALD 12/02/98
MFG APPVL: N/A
Q.A. APPVL: S.GRAY 11/30/98
MKTG APPVL: B.HARDGROVE 11/25/98
CAD FILE: SE211915-26_1
MDL REF: N/A

FCI FRAMATOME GROUP
BURNDY . RACINE . MALICO . SAAE Products

DRAWING NO. SE211915 REV 1

SHEET 26 OF 36

REV. 061995

DRAWING NO. SE211915

CATALOG NO.	CONDUCTOR CODE (AWG)	CONDUCTOR NAVY ◁5	BOLT SIZE	FIG. NO.	B ±.08	C ±.04	E ±.02	H REF.	K DIA. ±.02	L ±.12	N ±.04	O.D. ±.01	T REF.	Y MIN.	DIE INDEX	COLOR CODE	MECHANICAL RATCHET MD7-34R MD6	MECHANICAL RATCHET OUR840	HYDRAULIC Y34A ◁7	HYDRAULIC Y750 Y35, BAT35 Y39, BAT750	HYDRAULIC Y46 ◁4	HYDRAULIC Y45 ◁3	HYDRAULIC Y48B ◁8	HYDRAULIC Y60B	DIELESS (# CRIMPS)	WIRE STRIP LENGTH
YAZ28-2TC14E2	4/0 AWG [-]	200	1/4 [M6]	1	1.62 [41]	1.02 [26]	.75 [19]	----	.27 [7]	3.55 [90]	.31 [8]	.69 [18]	.14 [4]	1.09 [28]	15	PURPLE	W28VT W28RT (4)	W28VT W28RT (4)	A28R (2)	U28RT (2)	U28RT (2)	U28RT (2)	C28R (2)	L28RT (1)	MECHANICAL: MY29-11 (1) HYDRAULIC: Y644, Y644M Y644MBH, Y1000 Y1000BH (1)	1-11/16
YAZ28-2TC14E2-45				2				2.02 [51]		3.25 [83]																
YAZ28-2TC14E2-90				3				2.36 [60]		1.86 [47]																
YAZ28-2TC38			3/8 [M10]	1		1.02 [26]	1.00 [25]	----	.40 [10]	3.99 [101]	.41 [10]			1.43 [36]												
YAZ28-2TC38-45				2				2.02 [51]		3.69 [94]																
YAZ28-2TC38-90				3				2.36 [60]		2.30 [58]																
YAZ28-2NT14			1/4 [M6]	1		.75 [19]	.62 [16]	----	.27 [7]	3.42 [87]	.31 [8]			.96 [24]												
YAZ28-2NT14-45				2				2.02 [51]		3.40 [86]																
YAZ28-2NT14-90	4/0 AWG [-]	200		3	1.62 [41]			2.36 [60]		3.11 [79]		.69 [18]	.14 [4]		15	PURPLE	W28VT W28RT (4)	W28VT W28RT (4)	A28R (2)	U28RT (2)	U28RT (2)	U28RT (2)	C28R (2)	L28RT (1)		1-11/16

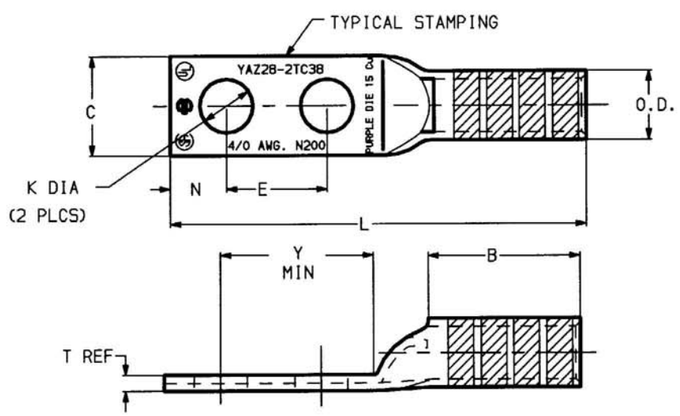

FIG 1

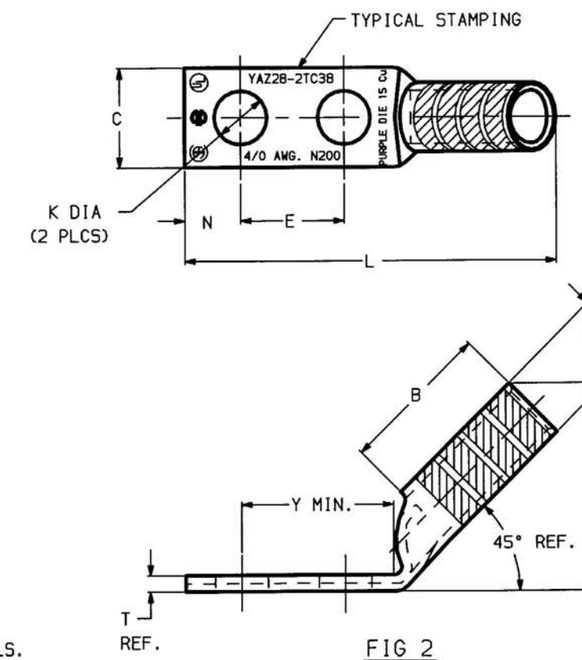

FIG 2

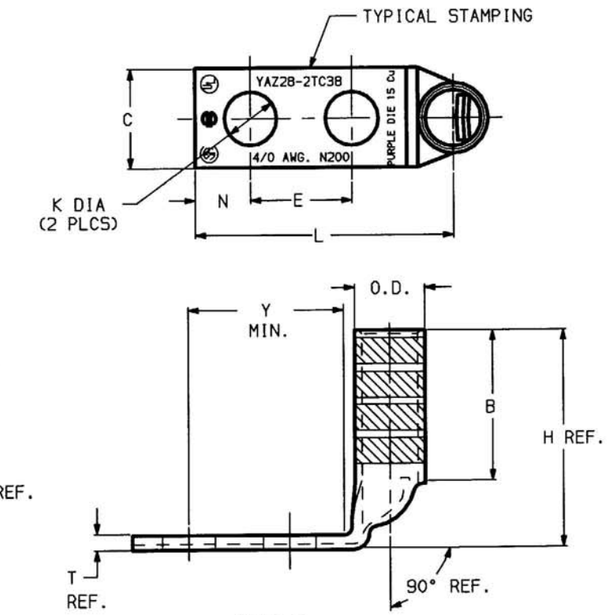

FIG 3

NOTES:

1. MATERIAL: COPPER TUBING.
2. FINISH: TIN PLATED
3. ◁3▷ CATALOG # PT6515 ADAPTOR IS REQUIRED TO USE "U" DIES IN Y45 SERIES TOOLS.
4. ◁4▷ CATALOG # PUADP-1 ADAPTOR IS REQUIRED TO USE "U" DIES IN Y46 SERIES TOOLS.
5. ◁5▷ NAVY CABLE SIZE MAY BE OMITTED ON SOME SIZES BECAUSE OF SPACE LIMITATIONS.
6. DIMENSIONS, METRIC WIRE, & METRIC BOLT SIZES IN BRACKETS [ ] ARE IN MILLIMETERS. DIMENSIONS ARE ROUNDED OFF TO THE NEAREST MILLIMETER, UNLESS OTHEWISE NOTED, AND ARE FOR REFERENCE ONLY.
7. ◁7▷ FOR USE BY CUSTOMERS THAT HAVE THIS HYPRESS.™ NO NEW Y34A HYPRESS™ ARE BEING PROCESSED.
8. ◁8▷ OVERLAPPING CRIMPS ARE REQUIRED ON THESE SIZES.

REV.	DATE	DESCRIPTION	ECO	BY	C'K'D.
1	6/2/01	ADDED CAT. # YAZ28-2NT14, YAZ28-2NT14-45 & YAZ28-2NT14-90	6604	PL	DB

TO ORDER BURNDY PRODUCTS CALL 1-800-346-4175
MANCHESTER, NH 03109, USA
FOR PRODUCT INFO = http://www.fciconnect.com

HYLUG™

CAT NO: YAZ28-2--- (TABLE)
SCALE NTS
DRAWN: D BOISVERT 11/12/98
CHECKED: K HENRY 12/3/98
DSGN APPVL: B MACDONALD 11/30/98
MFG APPVL: N/A
Q.A. APPVL: S GRAY 11/30/98
MKTG APPVL: N/A
CAD FILE: SE211915-27_1
MDL REF: N/A

FCI BURNDY PRODUCTS

DRAWING NO. SE211915
REV 1
SHEET 27 OF 36

REV: 012000

DRAWING NO. SE211915

CATALOG NO.	CONDUCTOR CODE (AWG)	CONDUCTOR NAVY 5	BOLT SIZE	FIG. NO.	B ±.08	C ±.04	E ±.02	H REF.	K DIA. ±.02	L ±.12	N ±.04	O.D. ±.01	T REF.	Y MIN.	DIE INDEX	COLOR CODE	MECHANICAL RATCHET MD7-34R MD6	MECHANICAL RATCHET OUR840	HYDRAULIC Y34A 7	HYDRAULIC Y750 Y35, BAT35 Y39, BAT750	HYDRAULIC Y46 4	HYDRAULIC Y45 3	HYDRAULIC Y48B 8	HYDRAULIC Y60B	DIELESS (# CRIMPS)	WIRE STRIP LENGTH
YAZ28-2NTC38	4/0 AWG [----]	200	3/8 [M10]	1	1.62 [41]	1.02 [26]	1.75 [44]	----	.40 [10]	4.74 [120]	.41 [10]	.69 [18]	.14 [4]	2.18 [55]	15	PURPLE	W28VT W28RT (4)	W28VT W28RT (4)	A28R (2)	U28RT (2)	U28RT (2)	U28RT (2)	C28R (2)	L28RT (1)	MECHANICAL: MY29-11 (1) HYDRAULIC: Y644, Y644M Y644MBH, Y1000 Y1000BH (1)	1-11/16
YAZ28-2NTC38-45				2				2.02 [51]		4.44 [113]																
YAZ28-2NTC38-90				3				2.36 [60]		3.05 [77]																
YAZ28-2NTC			1/2 [M12]	1				----	.56 [14]	5.15 [131]	.62 [16]			2.40 [61]												
YAZ28-2NTC-45				2				2.02 [51]		4.86 [123]																
YAZ28-2NTC-90	4/0 AWG [----]	200		3	1.62 [41]	1.02 [26]	1.75 [44]	2.36 [60]		3.49 [89]		.69 [18]	.14 [4]		15	PURPLE	W28VT W28RT (4)	W28VT W28RT (4)	A28R (2)	U28RT (2)	U28RT (2)	U28RT (2)	C28R (2)	L28RT (1)		1-11/16

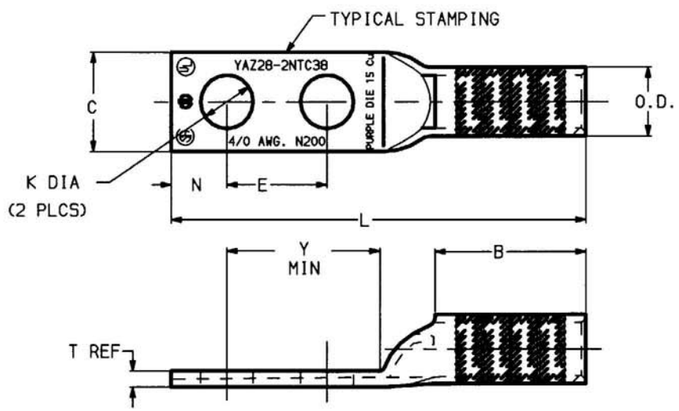

FIG 1

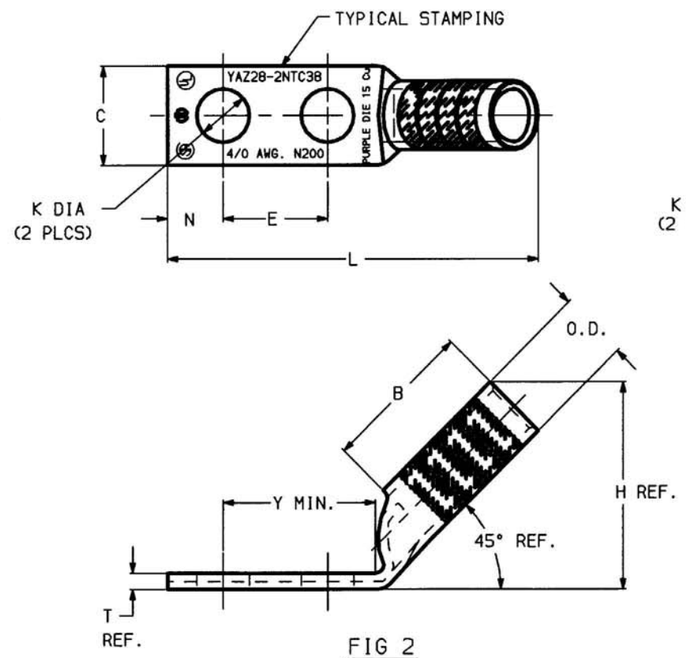

FIG 2

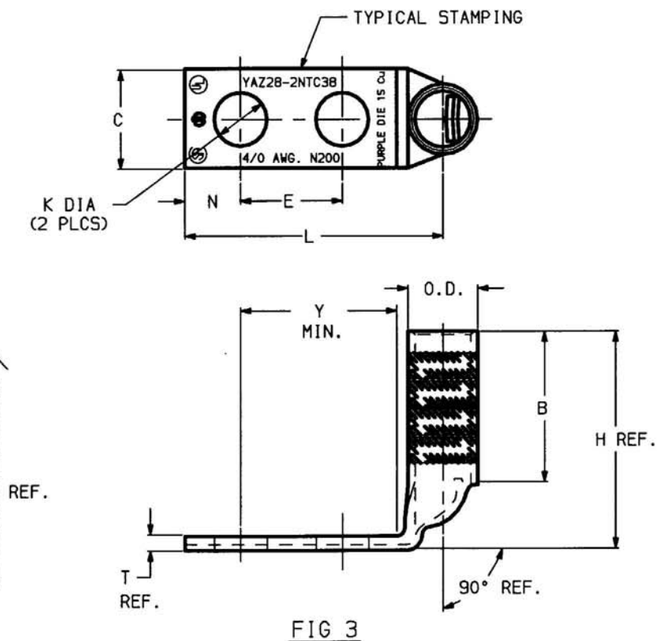

FIG 3

NOTES:

1. MATERIAL: COPPER TUBING.
2. FINISH: TIN PLATED
3. CATALOG # PT6515 ADAPTOR IS REQUIRED TO USE "U" DIES IN Y45 SERIES TOOLS.
4. CATALOG # PUADP-1 ADAPTOR IS REQUIRED TO USE "U" DIES IN Y46 SERIES TOOLS.
5. NAVY CABLE SIZE MAY BE OMITTED ON SOME SIZES BECAUSE OF SPACE LIMITATIONS.
6. DIMENSIONS, METRIC WIRE, & METRIC BOLT SIZES IN BRACKETS [ ] ARE IN MILLIMETERS. DIMENSIONS ARE ROUNDED OFF TO THE NEAREST MILLIMETER, UNLESS OTHEWISE NOTED, AND ARE FOR REFERENCE ONLY.
7. FOR USE BY CUSTOMERS THAT HAVE THIS HYPRESS.™ NO NEW Y34A HYPRESS™ ARE BEING PROCESSED.
8. OVERLAPPING CRIMPS ARE REQUIRED ON THESE SIZES.

REV.	DATE	DESCRIPTION	ECO	BY	C'K'D.
1	6/04/01	ADD CAT.#'S YAZ28-2NTC, -45, -90 TO TABLE.	6481	DB	PL

TO ORDER BURNDY PRODUCTS CALL 1-800-346-4175
MANCHESTER, NH 03109, USA
FOR PRODUCT INFO = http://www.fciconnect.com

HYLUG™

CAT NO: YAZ28-2NTC- (TABLE) SCALE NTS

DRAWN: D.BOISVERT 11/12/98 CHECKED: K.HENRY 12/03/98
DSGN APPVL: B.MACDONALD 12/02/98 MFG APPVL: N/A
Q.A. APPVL: S.GRAY 11/30/98
MKTG APPVL: B.HARDGROVE 11/25/98
CAD FILE: SE211915-28_1
MDL REF: N/A

FCI FRAMATOME GROUP
BURNDY . RACINE . MALICO . SAAE Products

DRAWING NO. SE211915 REV 1
SHEET 28 OF 36

REV: 061995

SE211915

CATALOG NO.	CONDUCTOR CODE (AWG)	CONDUCTOR NAVY ◁5	BOLT SIZE	FIG. NO.	DIMENSIONS B ±.08	C ±.04	E ±.02	H REF.	K DIA. ±.02	L ±.12	N ±.04	O.D. ±.01	T REF.	Y MIN.	INSTALLATION TOOLING (# CRIMPS): DIE INDEX	COLOR CODE	MECHANICAL RATCHET MD7-34R MD6	MECHANICAL RATCHET OUR840	HYDRAULIC Y34A ◁7	HYDRAULIC Y750 Y35, BAT35 Y39, BAT750	HYDRAULIC Y46 ◁4	HYDRAULIC Y45 ◁3	HYDRAULIC Y48B ◁8	HYDRAULIC Y60B	DIELESS (# CRIMPS)	WIRE STRIP LENGTH
YAZ29-2TC38	250 kcmil [120mm² STR]	250	3/8 [M10]	1	1.62 [41]	1.10 [28]	1.00 [25]	----	.40 [10]	3.99 [101]	.41 [10]	.75 [19]	.14 [4]	1.43 [36]	16	YELLOW	W29VT W29RT (4)	X29RT (6)	A29R (2)	U29RT (2)	U29RT (2)	U29RT (2)	C29R (2)	L29RT (1)	HYDRAULIC: Y644, Y644M Y644MBH, Y1000 Y1000BH (1)	1-11/16
YAZ29-2TC38-45				2				2.09 [53]		3.73 [95]																
YAZ29-2TC38-90				3				2.42 [61]		2.34 [59]																

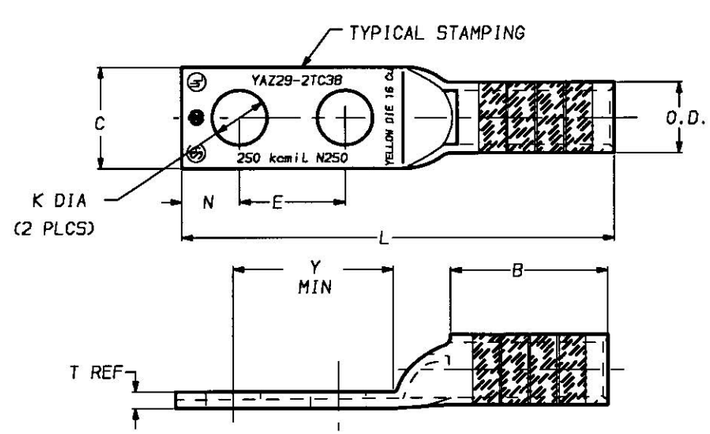

FIG 1

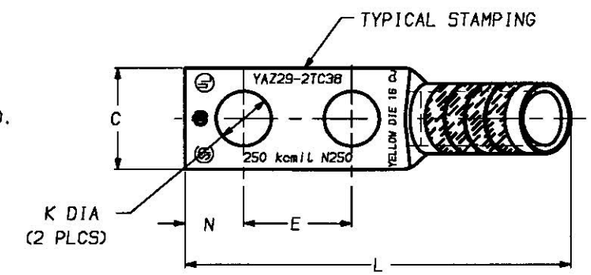

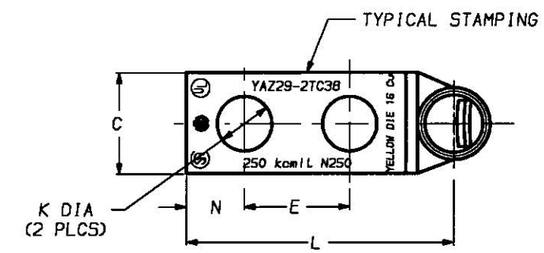

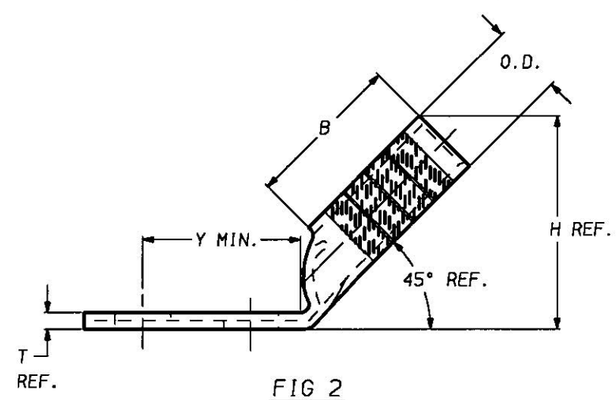

FIG 2

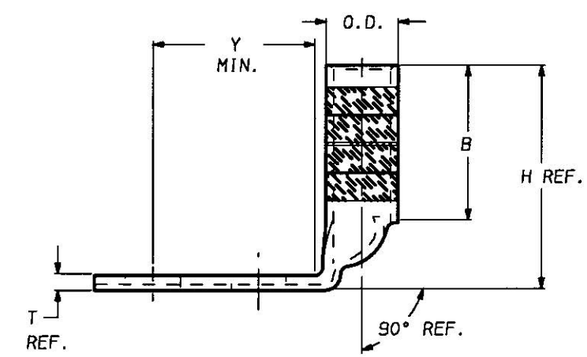

FIG 3

NOTES:

1. MATERIAL: COPPER TUBING.
2. FINISH: TIN PLATED
3. ▷ CATALOG # PT6515 ADAPTOR IS REQUIRED TO USE "U" DIES IN Y45 SERIES TOOLS.
4. ▷ CATALOG # PUADP-1 ADAPTOR IS REQUIRED TO USE "U" DIES IN Y46 SERIES TOOLS.
5. ▷ NAVY CABLE SIZE MAY BE OMITTED ON SOME SIZES BECAUSE OF SPACE LIMITATIONS.
6. DIMENSIONS, METRIC WIRE, & METRIC BOLT SIZES IN BRACKETS [ ] ARE IN MILLIMETERS. DIMENSIONS ARE ROUNDED OFF TO THE NEAREST MILLIMETER, UNLESS OTHEWISE NOTED, AND ARE FOR REFERENCE ONLY.
7. ▷ FOR USE BY CUSTOMERS THAT HAVE THIS HYPRESS.™ NO NEW Y34A HYPRESS™ ARE BEING PROCESSED.
8. ▷ OVERLAPPING CRIMPS ARE REQUIRED ON THESE SIZES.

REV.	DATE	DESCRIPTION	BY	C'K'D.
0	11/19/98	RELEASED PER ECO 4612.	DB	KH

HYLUG™

CAT NO: YAZ29-2TC- (SEE TABLE) — SCALE NTS

DRAWN: D. BOISVERT 11/12/98 — CHECKED: K. HENRY 12/03/98

DSGN APPVL: B. MACDONALD 12/02/98 — MFG APPVL: N/A

Q.A. APPVL: S. GRAY 11/30/98 — MKTG APPVL: B. HARGROVE 11/25/98

CAD FILE: SE211915-29_0 — PM REF: N/A

MDL REF: N/A

PROJECT: .

FRAMATOME CONNECTORS USA INC.
BURNDY ELECTRICAL
MANCHESTER, NH 03108
U. S. A.
1-800-346-4175

DRAWING NO. SE211915 — REV 0

SHEET 29 OF 36

REV: 061995

SE211915

CATALOG NO.	CONDUCTOR CODE (AWG)	CONDUCTOR NAVY ◁5	BOLT SIZE	FIG. NO.	B ±.08	C ±.04	E ±.02	H REF.	K DIA. ±.02	L ±.12	N ±.04	O.D. ±.01	T REF.	Y MIN.	DIE INDEX	COLOR CODE	MECHANICAL RATCHET MD7-34R	HYDRAULIC Y34A ◁7	HYDRAULIC Y750 Y35, BAT35 Y39, BAT750	HYDRAULIC Y46 ◁4	HYDRAULIC Y45 ◁3	HYDRAULIC Y48B	HYDRAULIC Y60B	DIELESS (# CRIMPS)	WIRE STRIP LENGTH
					DIMENSIONS										INSTALLATION TOOLING (# CRIMPS)										
YAZ30-2TC38	300 kcmil [150mm² STR]	300	3/8 [M10]	1	2.00 [51]	1.20 [30]	1.00 [25]	----	.40 [10]	4.42 [112]	.41 [10]	.81 [21]	.16 [4]	1.43 [36]	17 OR 298	WHITE	W30RT (4)	A28R A30R (4)	U30RT U28ART (4)	U30RT U28ART (4)	U30RT U28ART (4)	C30R (1) C28AR (4)	L30RT (1)	HYDRAULIC: Y644, Y644M Y644MBH, Y1000 Y1000BH (1)	2-1/16
YAZ30-2TC38-45				2				2.44 [62]		4.04 [103]															
YAZ30-2TC38-90				3				2.86 [73]		2.37 [60]															

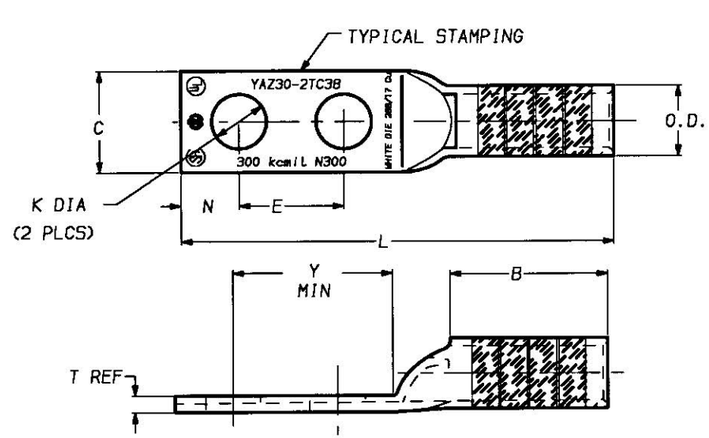

FIG 1

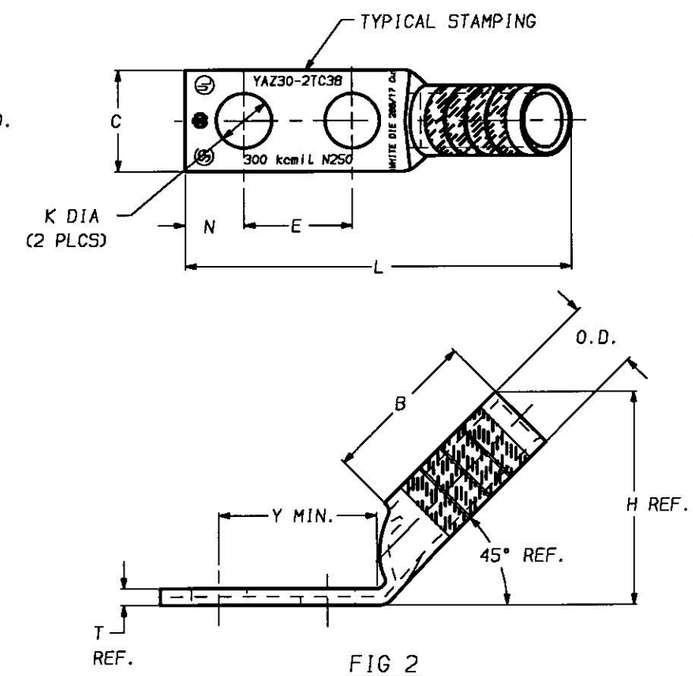

FIG 2

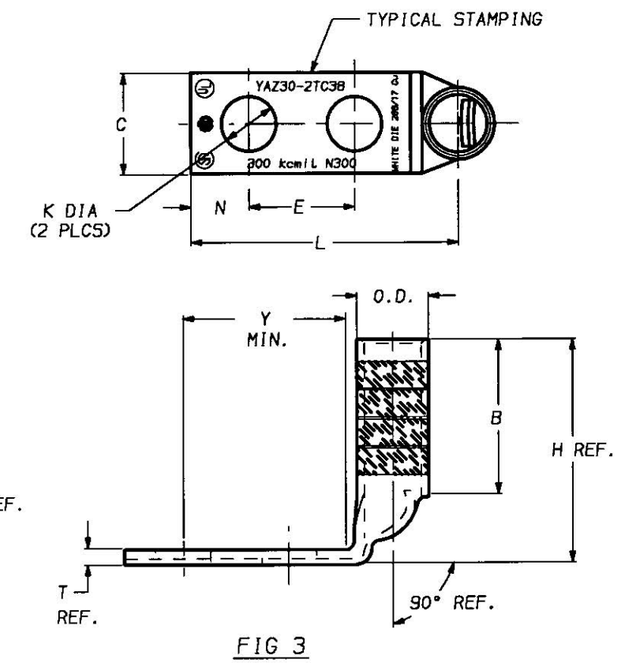

FIG 3

NOTES:

1. MATERIAL: COPPER TUBING.
2. FINISH: TIN PLATED
3. ▷3 CATALOG # PT6515 ADAPTOR IS REQUIRED TO USE "U" DIES IN Y45 SERIES TOOLS.
4. ▷4 CATALOG # PUADP-1 ADAPTOR IS REQUIRED TO USE "U" DIES IN Y46 SERIES TOOLS.
5. ▷5 NAVY CABLE SIZE MAY BE OMITTED ON SOME SIZES BECAUSE OF SPACE LIMITATIONS.
6. DIMENSIONS, METRIC WIRE, & METRIC BOLT SIZES IN BRACKETS [ ] ARE IN MILLIMETERS. DIMENSIONS ARE ROUNDED OFF TO THE NEAREST MILLIMETER, UNLESS OTHEWISE NOTED, AND ARE FOR REFERENCE ONLY.
7. ▷7 FOR USE BY CUSTOMERS THAT HAVE THIS HYPRESS.™ NO NEW Y34A HYPRESS™ ARE BEING PROCESSED.

REV.	DATE	DESCRIPTION	BY	C'K'D.
0	11/19/98	RELEASED PER ECO 4612.	DB	KH

HYLUG™

CAT NO. YAZ30-2TC- (SEE TABLE) — SCALE NTS

DRAWN: D. BOISVERT 11/12/98 — CHECKED: K.HENRY 12/03/98

DSGN APPVL: B. MACDONALD 12/02/98 — MFG APPVL: N/A

Q.A. APPVL: S. GRAY 11/30/98 — MKTG APPVL: B. HARGROVE 11/25/98

CAD FILE: SE211915-30_0 — PM REF: N/A

MDL REF: N/A

PROJECT: .

FRAMATOME CONNECTORS USA INC.
BURNDY ELECTRICAL
MANCHESTER, NH 03108
U. S. A.
1-800-346-4175

DRAWING NO. SE211915 — REV 0

SHEET 30 OF 36

REV. 061995

DRAWING NO. SE211915

CATALOG NO.	CONDUCTOR CODE (AWG)	CONDUCTOR NAVY ⟨5⟩	BOLT SIZE	FIG. NO.	B ±.08	C ±.04	E ±.02	H REF.	K DIA. ±.02	L ±.12	N ±.04	O.D. ±.01	T REF.	Y MIN.	INSTALLATION TOOLING (# CRIMPS): DIE INDEX	COLOR CODE	MECHANICAL RATCHET MD7-34R	HYDRAULIC Y34A ⟨7⟩	Y750 Y35, BAT35 Y39, BAT750	Y46 ⟨4⟩	Y45 ⟨3⟩	Y48B	Y60B	DIELESS (# CRIMPS)	WIRE STRIP LENGTH
YAZ31-2TC14E2	350 kcmil [----]	350	1/4 [M6]	1	2.00 [51]	1.29 [33]	.75 [19]	----	.27 [7]	4.02 [102]	.31 [8]	.88 [22]	.18 [5]	1.09 [28]	18 OR 324	RED	W31VT W31RT (4)	A31R A29AR (4)	U31RT U29ART (4)	U31RT U29ART (4)	U31RT U29ART (4)	C31R C29AR (1)	L31RT L29ART (1)	HYDRAULIC: Y644, Y644M Y644MBH, Y1000 Y1000BH (1)	2-1/16
YAZ31-2TC14E2-45				2				2.51 [64]		3.66 [93]															
YAZ31-2TC14E2-90				3				2.92 [74]		1.97 [50]															
YAZ31-2NT38			3/8 [M10]	1		.96 [24]	1.00 [25]	----	.40 [10]	4.45 [113]	.41 [10]			1.43 [36]											
YAZ31-2NT38-45				2				2.51 [64]		4.10 [104]															
YAZ31-2NT38-90				3				2.92 [74]		2.41 [61]															
YAZ31-2TC38			3/8 [M10]	1		1.29 [33]		----	.40 [10]	4.45 [113]	.41 [10]			1.43 [36]											
YAZ31-2TC38-45				2				2.51 [64]		4.10 [104]															
YAZ31-2TC38-90				3			1.00 [25]	2.92 [74]		2.41 [61]															
YAZ31-2NTC			1/2 [M12]	1			1.75 [44]	----	.56 [14]	5.64 [143]	.62 [16]			2.40 [61]											
YAZ31-2NTC-45				2				2.51 [64]		5.29 [134]															
YAZ31-2NTC-90	350 kcmil [----]	350		3	2.00 [51]	1.29 [33]		2.92 [74]		3.60 [91]		.88 [22]	.18 [5]		18 OR 324	RED	W31VT W31RT (4)	A31R A29AR (4)	U31RT U29ART (4)	U31RT U29ART (4)	U31RT U29ART (4)	C31R C29AR (1)	L31RT L29ART (1)		2-1/16

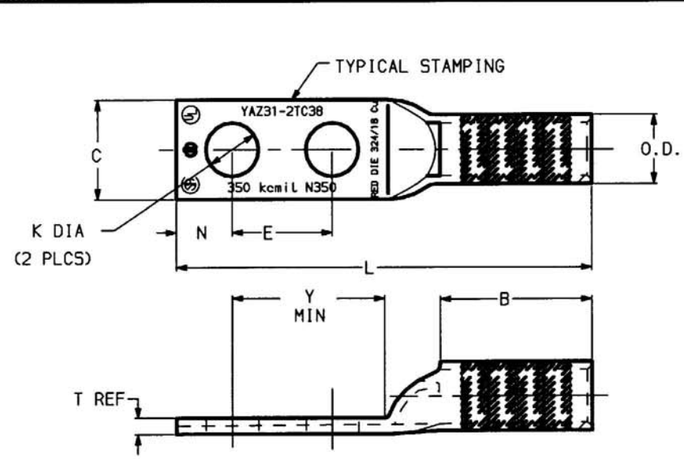

FIG 1

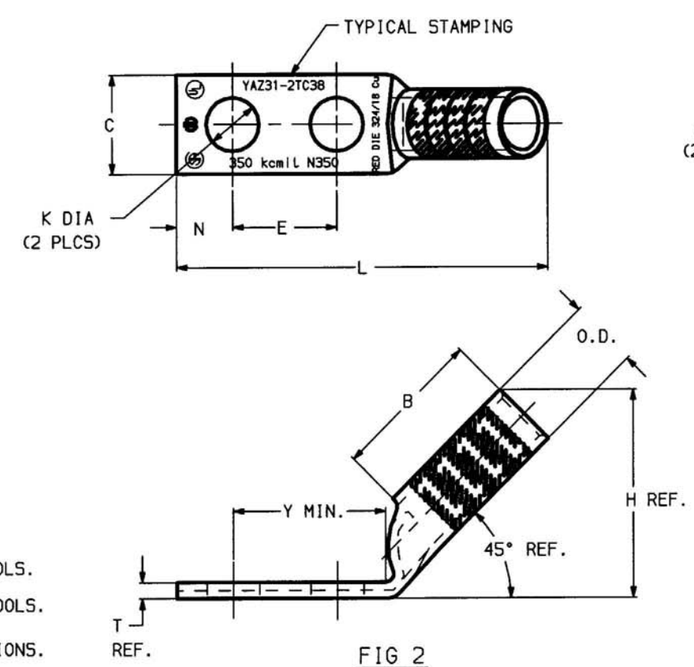

FIG 2

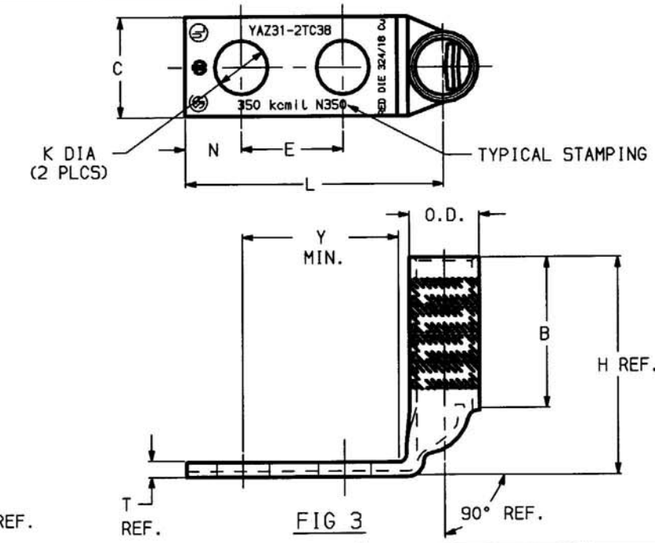

FIG 3

NOTES:

1. MATERIAL: COPPER TUBING.
2. FINISH: TIN PLATED
3. ⟨3⟩ CATALOG # PT6515 ADAPTOR IS REQUIRED TO USE "U" DIES IN Y45 SERIES TOOLS.
4. ⟨4⟩ CATALOG # PUADP-1 ADAPTOR IS REQUIRED TO USE "U" DIES IN Y46 SERIES TOOLS.
5. ⟨5⟩ NAVY CABLE SIZE MAY BE OMITTED ON SOME SIZES BECAUSE OF SPACE LIMITATIONS.
6. DIMENSIONS, METRIC WIRE, & METRIC BOLT SIZES IN BRACKETS [ ] ARE IN MILLIMETERS. DIMENSIONS ARE ROUNDED OFF TO THE NEAREST MILLIMETER, UNLESS OTHEWISE NOTED, AND ARE FOR REFERENCE ONLY.
7. ⟨7⟩ FOR USE BY CUSTOMERS THAT HAVE THIS HYPRESS.™ NO NEW Y34A HYPRESS™ ARE BEING PROCESSED.

REV.	DATE	DESCRIPTION	ECO	BY	C'K'D.
2	6/04/01	ADD CAT.#'S YAZ31-2, -45, -90 TO TABLE.	6481	DB	PL

TO ORDER BURNDY PRODUCTS CALL 1-800-346-4175
MANCHESTER, NH 03109, USA
FOR PRODUCT INFO = http://www.fciconnect.com

HYLUG™

CAT NO. YAZ31-2 (TABLE) — SCALE NTS

DRAWN: D.BOISVERT 11/12/98 — CHECKED: K.HENRY 12/03/98
DSGN APPVL: B.MACDONALD 12/02/98 — MFG APPVL: N/A
Q.A. APPVL: S.GRAY 11/30/98
MKTG APPVL: B.HARDGROVE 11/25/98
CAD FILE: SE211915-31_2
MDL REF: N/A

FCI FRAMATOME GROUP
BURNDY . RACINE . MALICO . SAAE Products

DRAWING NO. SE211915 — REV 2
SHEET 31 OF 36

REV. 061995

DRAWING NO. SE211915

CATALOG NO.	CONDUCTOR CODE (AWG)	CONDUCTOR NAVY ◁5	BOLT SIZE	FIG. NO.	DIMENSIONS B ±.08	C ±.04	E ±.02	H REF.	K DIA. ±.02	L ±.12	N ±.04	O.D. ±.01	T REF.	Y MIN.	INSTALLATION TOOLING (# CRIMPS): DIE INDEX	COLOR CODE	MECHANICAL RATCHET MD7-34R	HYDRAULIC Y34A ◁7	Y750 Y35, BAT35 Y39, BAT750	Y46 ◁4	Y45 ◁3	Y48B	Y60B	DIELESS (# CRIMPS)	WIRE STRIP LENGTH
YAZ32-2TC38	400 kcmil [----]	400	3/8 [M10]	1	2.12 [54]	1.40 [36]	1.00 [25]	----	.40 [10]	4.62 [117]	.41 [10]	.95 [24]	.19 [5]	1.43 [36]	19 OR 470	BLUE	W32RT (4)	A32R A30AR (4)	U32RT U30ART (4)	U32RT U30ART (4)	U32RT U30ART (4)	C32R C30AR (1)	L32RT L30ART (1)	HYDRAULIC: Y644, Y644M Y644MBH, Y1000 Y1000BH (1)	2-3/16
YAZ32-2TC38-45				2				2.69 [68]		4.25 [108]															
YAZ32-2TC38-90				3				3.12 [79]		2.46 [62]															

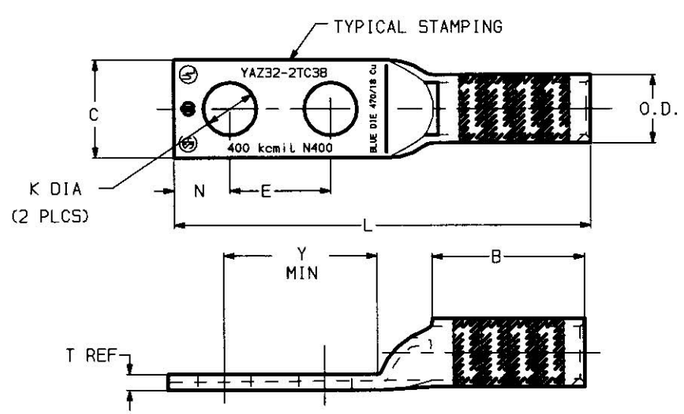

FIG 1

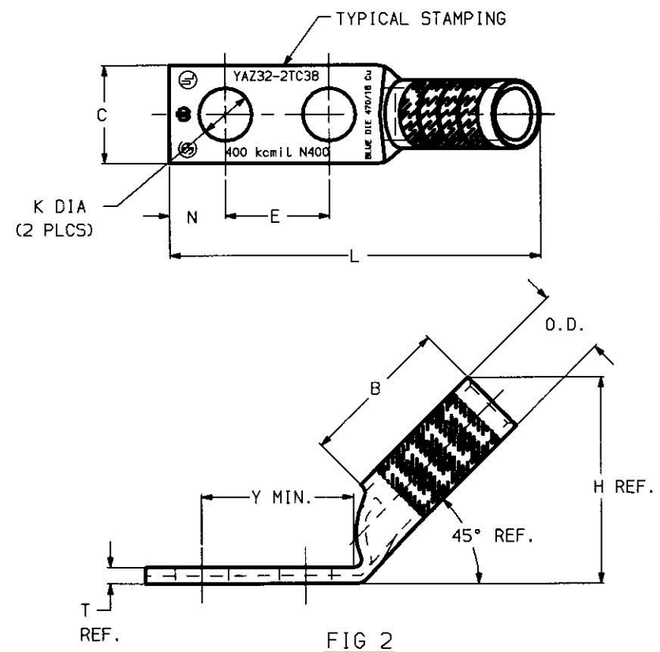

FIG 2

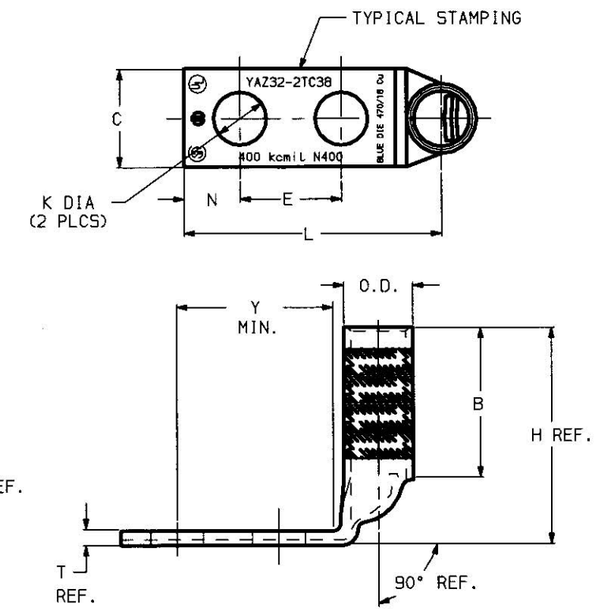

FIG 3

NOTES:

1. MATERIAL: COPPER TUBING.
2. FINISH: TIN PLATED
3. ◁3▷ CATALOG # PT6515 ADAPTOR IS REQUIRED TO USE "U" DIES IN Y45 SERIES TOOLS.
4. ◁4▷ CATALOG # PUADP-1 ADAPTOR IS REQUIRED TO USE "U" DIES IN Y46 SERIES TOOLS.
5. ◁5▷ NAVY CABLE SIZE MAY BE OMITTED ON SOME SIZES BECAUSE OF SPACE LIMITATIONS.
6. DIMENSIONS, METRIC WIRE, & METRIC BOLT SIZES IN BRACKETS [ ] ARE IN MILLIMETERS. DIMENSIONS ARE ROUNDED OFF TO THE NEAREST MILLIMETER, UNLESS OTHEWISE NOTED, AND ARE FOR REFERENCE ONLY.
7. ◁7▷ FOR USE BY CUSTOMERS THAT HAVE THIS HYPRESS.™ NO NEW Y34A HYPRESS™ ARE BEING PROCESSED.

REV.	DATE	DESCRIPTION	BY	C'K'D.
1	06/27/00	FIXED REV SHOULD OF BEEN REV 1	JRW	.

HYLUG™

CAT NO: YAZ32-2TC- (SEE TABLE) — SCALE NTS

DRAWN: D. BOISVERT 11/12/98 — CHECKED: K. HENRY 12/03/98
DSGN APPVL: B. MACDONALD 12/02/98 — MFG APPVL: N/A
Q.A. APPVL: S. GRAY 11/30/98 — MKTG APPVL: B. HARGROVE 11/25/98
CAD FILE: SE211915-32_1 — PM REF: N/A
MDL REF: N/A
PROJECT: .

FRAMATOME CONNECTORS USA INC.
BURNDY ELECTRICAL
FCI
MANCHESTER, NH 03108
U. S. A.
1-800-346-4175

DRAWING NO. SE211915 — REV 1
SHEET 32 OF 36

REV: 061995

DRAWING NO.
SE211915

REV.	DATE	DESCRIPTION	ECO	BY	C'K'D.
B	4/10/08	REVERSE TUBE REDUCTION CHNG --	15552	PL	PL

CATALOG NO.	CONDUCTOR CODE (AWG)	CONDUCTOR NAVY	BOLT SIZE	FIG. NO.	B .±.08	C .±.04	E .±.02	H REF.	K DIA. .±.02	L .±.12	N .±.04	O.D .±.01	T REF.	Y MIN.	DIE INDEX	COLOR CODE	MECHANICAL RATCHET MD7-34R	HYDRAULIC Y34A ◁6	HYDRAULIC Y750 Y35,BAT35 Y39,BAT750	HYDRAULIC Y46 ◁4	HYDRAULIC Y45 ◁3	HYDRAULIC Y488	HYDRAULIC Y60B	DIELESS (# CRIMPS)	WIRE STRIP LENGTH
YAZ34-2TC14E2	500 kcmil (240mm2 STR)	----	1/4 [M6]	1	2.25 [57]	1.55 [39]	.75 [19]	----	.27 [7]	4.42 [112]	.31 [8]	1.06 [27]	.23 [6]	1.09 [28]	20 OR 299	BROWN	W34RT [4]	A34R [4]	U34RT (4) U31ART (2)	U34RT (4) U31ART (2)	U34RT (4) U31ART (2)	C34R (2) C31AR (1)	L34RT (2)	HYDRAULIC, Y644,Y644M Y644MBH, Y1000 Y1000BH (1)	2-5/16
YAZ34-2TC14E2-45				2				2.94 [75]		4.06 [103]															
YAZ34-2TC14E2-90				3				3.41 [87]		2.10 [53]															
YAZ34-2NT38			3/8 [M10]	1		.96 [24]	1.00 [25]	----	.40 [10]	4.85 [123]	.41 [10]			1.43 [36]											
YAZ34-2NT38-45				2				2.94 [75]		4.50 [114]															
YAZ34-2NT38-90				3				3.41 [87]		2.54 [65]															
YAZ34-2TC38			3/8 [M10]	1		1.55 [39]	1.00 [25]	----	.40 [10]	4.85 [123]	.41 [10]			1.43 [36]											
YAZ34-2TC38-45				2				2.94 [75]		4.50 [114]															
YAZ34-2TC38-90				3				3.41 [87]		2.54 [65]															
YAZ34-2NTC			1/2 [M12]	1		1.55 [39]	1.75 [44]	----	.56 [14]	6.04 [153]	.62 [16]			2.40 [61]					U34RT (4) U31ART (2)	U34RT (4) U31ART (2)	U34RT (4) U31ART (2)	C34R (2) C31AR (1)	L34RT (2)		
YAZ34-2NTC-45	500 kcmil (240mm2 STR)	----		2	2.25 [57]			2.94 [75]		5.68 [144]		1.06 [27]	.23 [6]		20 OR 299	BROWN	W34RT [4]	A34R [4]							2-5/16
YAZ34-2NTC-90				3				3.41 [87]		3.72 [94]															

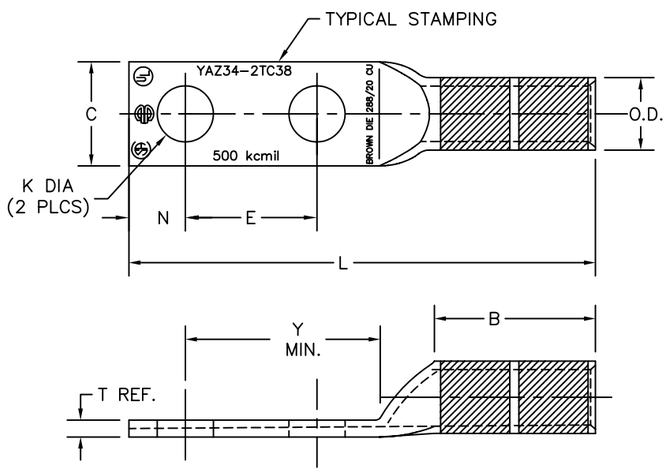

FIG. 1

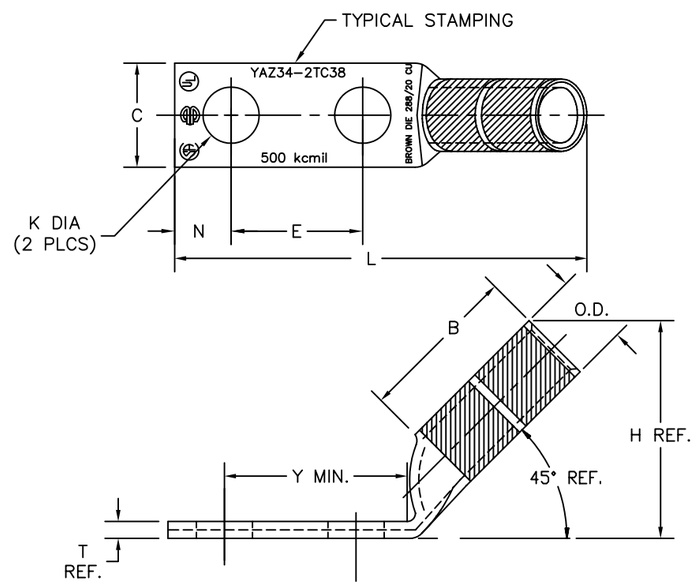

FIG. 2

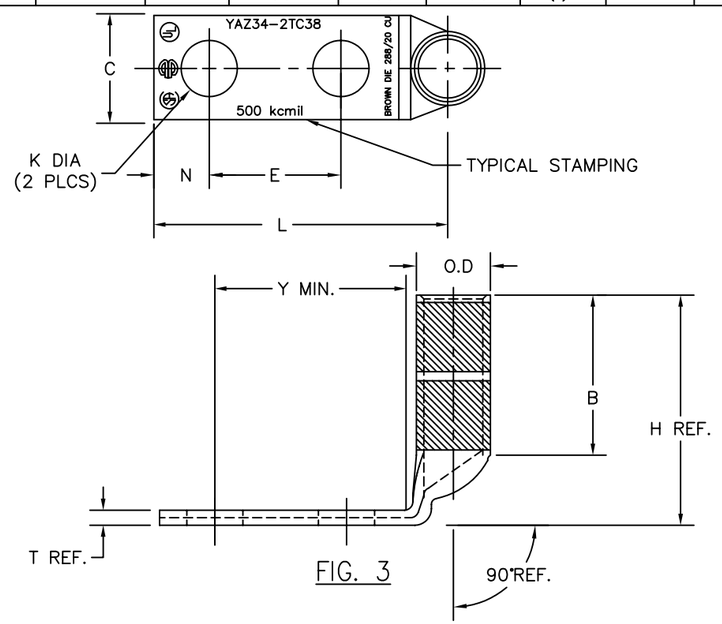

FIG. 3

NOTES:

1 MATERIAL: COPPER TUBING.

2 FINISH: TIN PLATED

3 CATALOG # PT6515 ADAPTOR IS REQUIRED TO USE "U" DIES IN Y45 SERIES TOOLS.

4 CATALOG # PUADP-1 ADAPTOR IS REQUIRED TO USE "U" DIES IN Y46 SERIES TOOLS.

5 DIMENSIONS, METRIC WIRE,&METRIC BOLT SIZES IN BRACKETS [ ] ARE IN MILLIMETERS, DIMENSIONS ARE ROUNDED OFF TO THE NEAREST MILLIMETER, UNLESS OTHERWISE NOTED, AND ARE FOR REFERENCE ONLY.

6 FOR USE BY CUSTOMERS THAT HAVE THIS HYPRESS™. NO NEW Y34A HYPRESS™ ARE BEING PROCESSED.

TO ORDER BURNDY® PRODUCTS CALL 1-800-346-4175
MANCHESTER, NH 03109, USA
FOR PRODUCT INFO = http://www.fciconnect.com

HYLUG™

ITEM NO: N/A

CAT NO: YAZ34-2 (TABLE)

SCALE:	NTS	
DRAWN BY:	D.BOISVERT	11/12/98
CHECKER:	K.HENRY	12/03/98
DSN APPVL:	B.MACDONALD	12/02/98
MFG APPVL:	N/A	--
QC APPVL:	S.GRAY	11/30/98
MKT APPVL:	B.HARDGROVE	11/25/98
PROD FAM:	--	
PROJECT #:	--	
DOCUMENT TYPE:	AutoCAD	
REL LEVEL:	--	

SIZE: D

DRAWING NO: SE211915

REV: B

SHEET 33 OF 36

SE211915

CATALOG NO.	CONDUCTOR CODE (AWG)	CONDUCTOR NAVY	BOLT SIZE	FIG. NO.	DIMENSIONS B ±.09	C ±.06	E ±.02	H REF.	K DIA. ±.02	L ±.15	N ±.06	O.D. ±.01	T REF.	Y MIN.	INSTALLATION TOOLING (# CRIMPS) DIE INDEX	COLOR CODE	HYDRAULIC Y750 Y35, BAT35 Y39, BAT750	Y46 ◁4	Y45 ◁3	Y48B	Y60B	DIELESS (# CRIMPS)	WIRE STRIP LENGTH
YAZ36-2TC38	600 kcmil [300mm² STR]	----	3/8 [M10]	1	2.69 [68]	1.74 [44]	1.00 [25]	----	.40 [10]	5.55 [141]	.50 [13]	1.19 [30]	.26 [7]	1.53 [39]	22 OR 472	GREEN	U36RT U32ART (4)	U36RT U32ART (4)	U32RT U30ART (4)	C36R C32AR (2)	L36RT L32ART (2)	HYDRAULIC: Y644, Y644M Y644MBH, Y1000 Y1000BH (1)	2-3/4
YAZ36-2TC38-45				2				3.40 [86]		5.14 [131]													
YAZ36-2TC38-90				3				3.99 [101]		2.81 [71]													

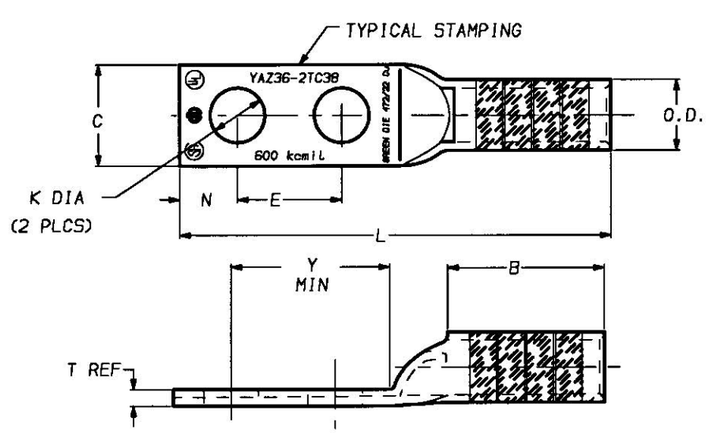

FIG 1

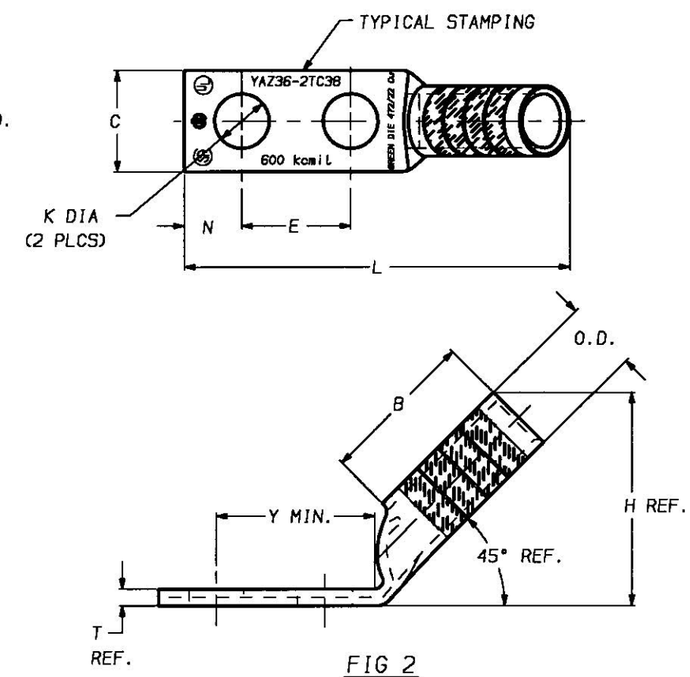

FIG 2

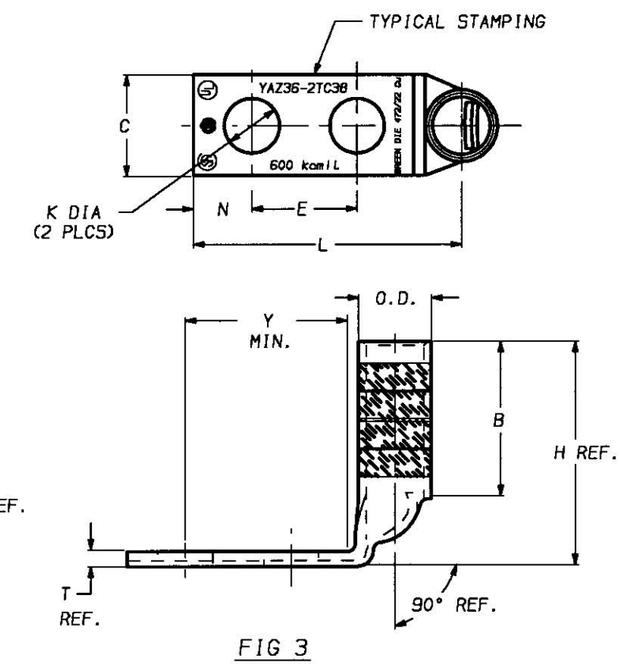

FIG 3

NOTES:

1. MATERIAL: COPPER TUBING.
2. FINISH: TIN PLATED
3. ◁3▷ CATALOG # PT6515 ADAPTOR IS REQUIRED TO USE "U" DIES IN Y45 SERIES TOOLS.
4. ◁4▷ CATALOG # PUADP-1 ADAPTOR IS REQUIRED TO USE "U" DIES IN Y46 SERIES TOOLS.
5. DIMENSIONS, METRIC WIRE, & METRIC BOLT SIZES IN BRACKETS [ ] ARE IN MILLIMETERS. DIMENSIONS ARE ROUNDED OFF TO THE NEAREST MILLIMETER, UNLESS OTHEWISE NOTED, AND ARE FOR REFERENCE ONLY.

REV.	DATE	DESCRIPTION	BY	C'K'D.
0	11/19/98	RELEASED PER ECO 4612.	DB	KH

HYLUG™

CAT NO. YAZ36-2TC- (SEE TABLE) — SCALE NTS

DRAWN: D. BOISVERT 11/12/98 — CHECKED: K. HENRY 12/03/98

DSGN APPVL: B. MACDONALD 12/02/98 — MFG APPVL: N/A

Q.A. APPVL: S. GRAY 11/30/98 — MKTG APPVL: B. HARGROVE 11/25/98

CAD FILE: SE211915-34_0 — PM REF: N/A

MDL REF: N/A

PROJECT: .

FRAMATOME CONNECTORS USA INC.
BURNDY ELECTRICAL
FCI
MANCHESTER, NH 03108
U. S. A.
1-800-346-4175

DRAWING NO. SE211915 — REV 0

SHEET 34 OF 36

REV. 061995

SE211915

CATALOG NO.	CONDUCTOR CODE (AWG)	CONDUCTOR NAVY	BOLT SIZE	FIG. NO.	B ±.09	C ±.06	E ±.02	H REF.	K DIA. ±.02	L ±.15	N ±.06	O.D. ±.01	T REF.	Y MIN.	DIE INDEX	COLOR CODE	Y750 Y35, BAT35 Y39, BAT750	Y46 ◁4	Y45 ◁3	Y48B	Y60B	DIELESS (# CRIMPS)	WIRE STRIP LENGTH
					DIMENSIONS										INSTALLATION TOOLING (# CRIMPS)								
																	HYDRAULIC						
YAZ39-2NT38	750 kcmil [----]	----	3/8 [M10]	1	2.88 [73]	1.63 [41]	1.00 [25]	----	.40 [10]	5.82 [148]	.50 [13]	1.30 [33]	.27 [7]	1.53 [39]	24	BLACK	U39RT (4)	U39RT (4)	U39RT (4)	C39R (2)	L39RT (2)	HYDRAULIC: Y644, Y644M Y644MBH, Y1000 Y1000BH (1)	2-15/16
YAZ39-2NT38-45				2				3.68 [93]		5.34 [136]													
YAZ39-2NT38-90				3				4.27 [108]		2.87 [73]													
YAZ39-2TC38			3/8 [M10]	1		1.91 [49]	1.00 [25]	----	.40 [10]	5.82 [148]	.50 [13]			1.53 [39]									
YAZ39-2TC38-45				2				3.68 [93]		5.34 [136]													
YAZ39-2TC38-90				3				4.27 [108]		2.87 [73]													
YAZ39-2NNT			1/2 [M12]	1		1.63 [41]	1.75 [44]	----	.56 [14]	6.82 [173]	.62 [16]			2.40 [61]									
YAZ39-2NNT-45				2				3.68 [93]		6.34 [161]													
YAZ39-2NNT-90	750 kcmil [----]	----		3	2.88 [73]			4.27 [108]		3.87 [98]		1.30 [33]	.27 [7]		24	BLACK	U39RT (4)	U39RT (4)	U39RT (4)	C39R (2)	L39RT (2)		2-15/16

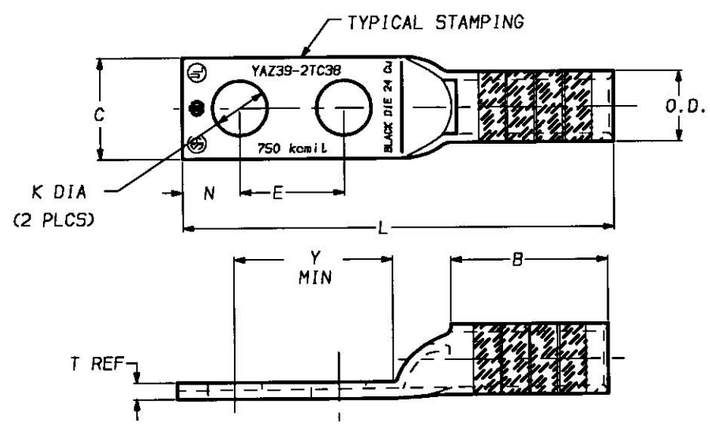

FIG 1

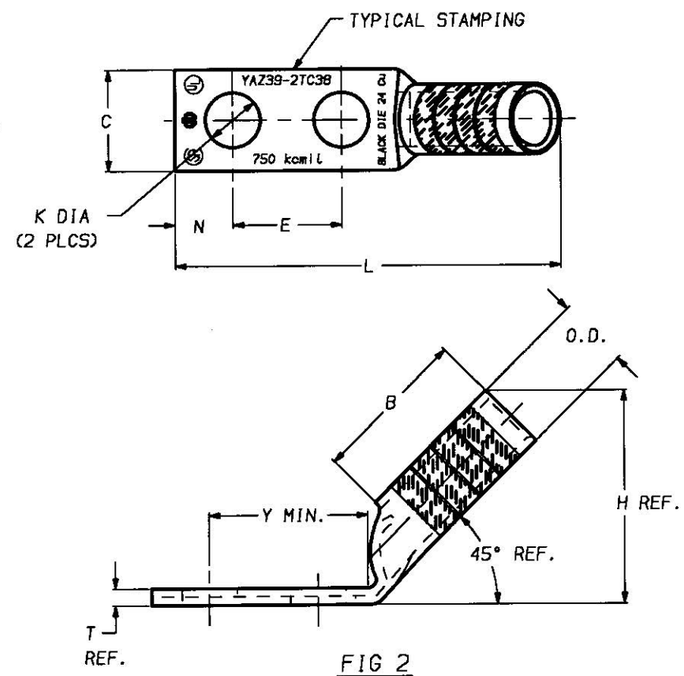

FIG 2

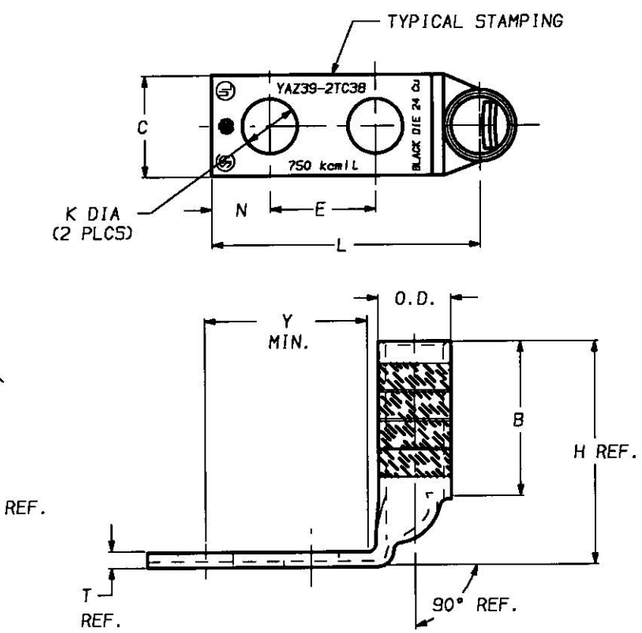

FIG 3

NOTES:

1. MATERIAL: COPPER TUBING.
2. FINISH: TIN PLATED
3. ◁3 CATALOG # PT6515 ADAPTOR IS REQUIRED TO USE "U" DIES IN Y45 SERIES TOOLS.
4. ◁4 CATALOG # PUADP-1 ADAPTOR IS REQUIRED TO USE "U" DIES IN Y46 SERIES TOOLS.
5. DIMENSIONS, METRIC WIRE, & METRIC BOLT SIZES IN BRACKETS [ ] ARE IN MILLIMETERS. DIMENSIONS ARE ROUNDED OFF TO THE NEAREST MILLIMETER, UNLESS OTHEWISE NOTED, AND ARE FOR REFERENCE ONLY.

REV.	DATE	DESCRIPTION	BY	C'K'D.
0	11/20/98	RELEASED PER ECO 4612.	DB	KH

HYLUG™

CAT NO: YAZ39- (SEE TABLE)

SCALE NTS

DRAWN: D. BOISVERT 11/12/98 CHECKED: K. HENRY 12/03/98
DSGN APPVL: B. MACDONALD 12/02/98 MFG APPVL: N/A
Q.A. APPVL: S. GRAY 11/30/98 MKTG APPVL: B. HARGROVE 11/25/98
CAD FILE: SE211915-35_0 PM REF: N/A
MDL REF: N/A
PROJECT:

FCI BURNDY PRODUCTS

DRAWING NO. SE211915 REV 0

SHEET 35 OF 36

REV. 061995

DRAWING NO.
SE211915

REV.	DATE	DESCRIPTION	ECO	BY	C'K'D.
B	05/02/08	C34 TUBE REDUCTION CHANGED BACK --	15655	RB	RB

CATALOG NO.	CONDUCTOR CODE (AWG)	CONDUCTOR NAVY	BOLT SIZE	FIG. NO.	B .±.09	C .±.06	E .±.02	H REF.	K DIA. .±.02	L .±.15	N .±.06	O.D .±.01	T REF.	Y MIN.	DIE INDEX	COLOR CODE	HYDRAULIC Y46 ◁4	HYDRAULIC Y45 ◁3	HYDRAULIC Y488	HYDRAULIC Y60B	DIELESS (# CRIMPS)	WIRE STRIP LENGTH
YAZ44-2TC38	1000 kcmil [500mm²]	----	3/8 [M10]	1	3.00 [76]	2.19 [56]	1.00 [25]	----	.40 [10]	6.09 [155]	.50 [13]	1.50 [38]	.33 [8]	1.53 [39]	27	WHITE	S44RT (4)	P44RT (4)	C44R (2)	L44RT (2)	HYDRAULIC, Y644,Y644M Y644MBH, Y1000 Y1000BH (1)	3-1/16
YAZ44-2TC38-45				2				4.02 [102]		5.66 [144]												
YAZ44-2TC38-90				3				4.64 [118]		3.02 [77]												
YAZ44-2NT38				1		1.62 [41]		----		6.09 [155]												
YAZ44-2NT38-45			3/8 [M10]	2			1.00 [25]	4.02 [102]	.40 [10]	5.66 [144]	.50 [13]			1.53 [39]								
YAZ44-2NT38-90				3				4.64 [118]		3.02 [77]												
YAZ44-2NNT			1/2 [M12]	1			1.75 [44]	----	.56 [14]	7.09 [180]	.62 [16]			2.40 [61]								
YAZ44-2NNT-45				2	3.00 [76]	1.62 [41]		4.02 [102]		6.66 [168]		1.50 [38]	.33 [8]		27	WHITE	S44RT (4)	P44RT (4)	C44R (2)	L44RT (2)		3-1/16
YAZ44-2NNT-90	1000 kcmil [500mm²]	----		3				4.64 [118]		4.02 [102]												

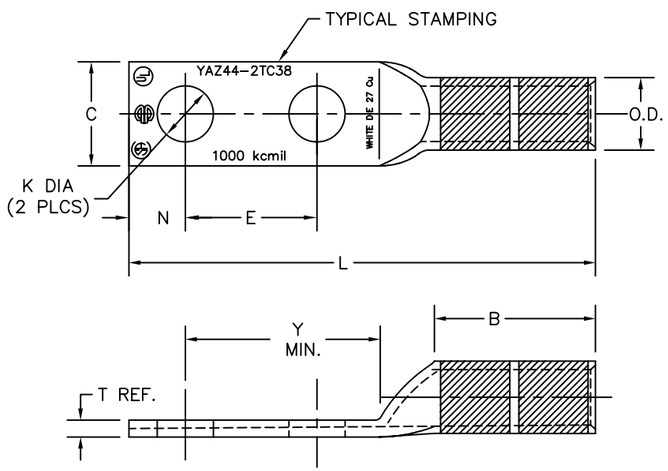

FIG. 1

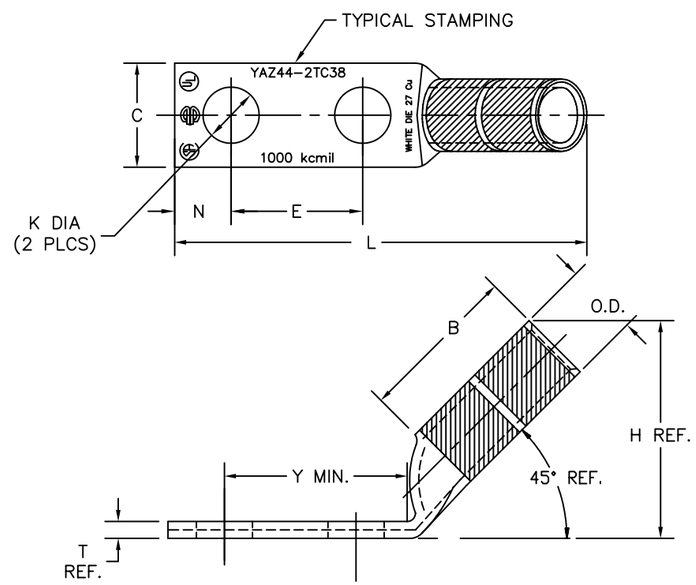

FIG. 2

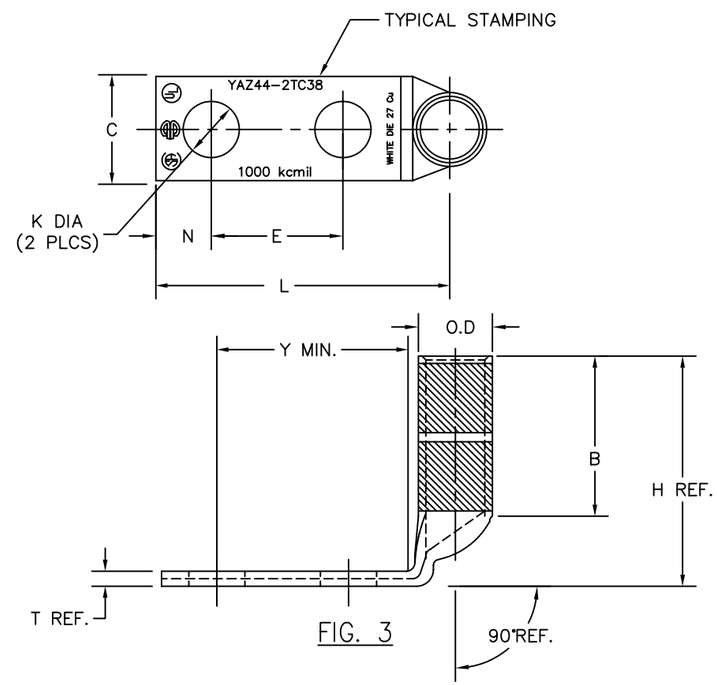

FIG. 3

NOTES:

1 MATERIAL: COPPER TUBING.

2 FINISH: TIN PLATED

3 CATALOG # PT6515 ADAPTOR IS REQUIRED TO USE "U" DIES IN Y45 SERIES TOOLS.

4 CATALOG # PUADP-1 ADAPTOR IS REQUIRED TO USE "U" DIES IN Y46 SERIES TOOLS.

5 DIMENSIONS, METRIC WIRE,&METRIC BOLT SIZES IN BRACKETS [ ] ARE IN MILLIMETERS, DIMENSIONS ARE ROUNDED OFF TO THE NEAREST MILLIMETER, UNLESS OTHERWISE NOTED, AND ARE FOR REFERENCE ONLY.

TO ORDER BURNDY® PRODUCTS CALL 1-800-346-4175
MANCHESTER, NH 03109, USA
FOR PRODUCT INFO = http://www.fciconnect.com

HYLUG™ (TWO HOLE CODE)

ITEM NO: N/A

CAT NO: YAZ44- (TABLE)

SCALE:	NTS	
DRAWN BY:	D.BOISVERT	11/12/98
CHECKER:	K.HENRY	12/03/98
DSN APPVL:	B.MACDONALD	12/02/98
MFG APPVL:	N/A	--
QC APPVL:	S.GRAY	11/30/98
MKT APPVL:	B.HARDGROVE	11/25/98
PROD FAM:	--	
PROJECT #:	--	
DOCUMENT TYPE:	AutoCAD	
REL LEVEL:	--	

FCI BURNDY PRODUCTS

DRAWING NO	REV
SE211915	B
SIZE: D	SHEET 36 OF 36