THIS DRAWING IS UNPUBLISHED. RELEASED FOR PUBLICATION -,- .
© COPYRIGHT - By - ALL RIGHTS RESERVED.

LOC	DIST
AD	00

REVISIONS

P	LTR	DESCRIPTION	DATE	DWN	APVD
	N3	REVISED PER ECO-11-004587	11MAR11	RK	HMR

1. THE NOTED DIMENSIONS APPLY AT THE INTERSECTION OF THE POST AND HOUSING
2. POINT OF MEASUREMENT FOR PLATING THICKNESS
3. POSTS:.000030 GOLD IN CONTACT AREA, .000100-.000200 MATTE TIN-LEAD ON THE SOLDER TAIL, ALL OVER .000050 NICKEL
4. POSTS:.000030 GOLD IN CONTACT AREA, .000100-.000200 MATTE TIN ON THE SOLDER TAIL, ALL OVER .000050 NICKEL
5. OBSOLETE PARTS: OBSOLETE CIS STREAMLINING PER D.RENAUD/D.SINISI

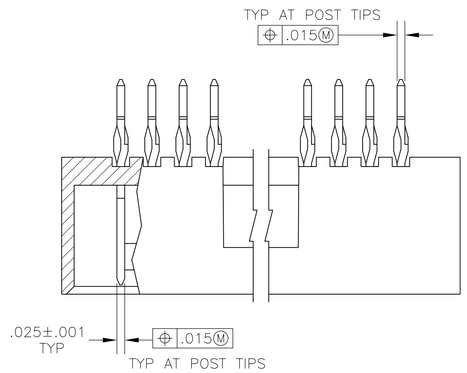

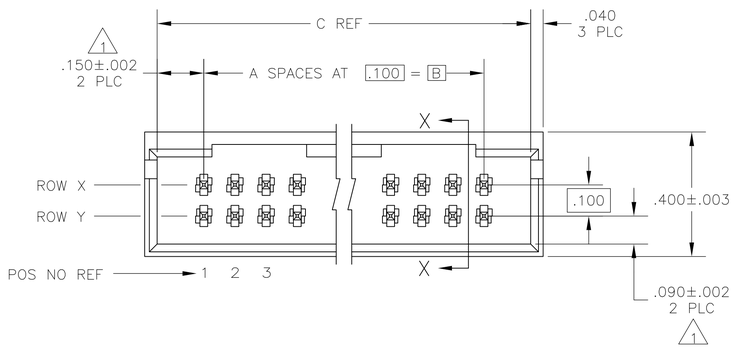

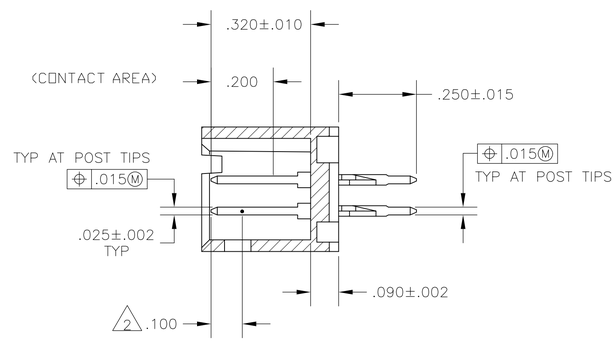

SECTION X-X

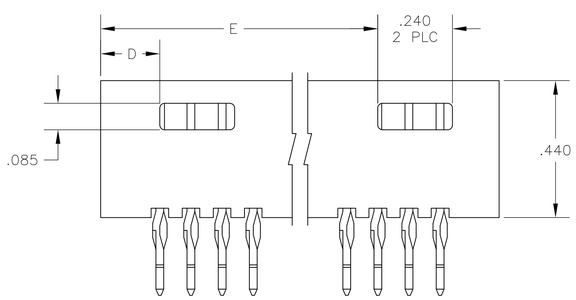

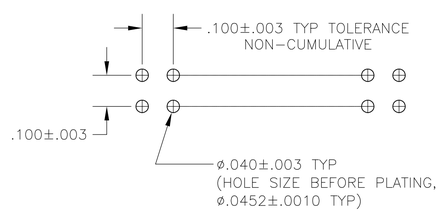

RECOMMENDED HOLE LAYOUT

5 OBSOLETE	4	5	NONE	.890	.190	1.200	.900	9	20	7-102557-9
5 OBSOLETE	4	NONE	NONE	1.090	.190	1.400	1.100	11	24	6-102557-7
5 OBSOLETE	4	NONE	NONE	—	.490	1.100	.800	8	18	6-102557-5
	4	NONE	NONE	—	.390	1.000	.700	7	16	6-102557-4
5 OBSOLETE	4	NONE	NONE	—	.390	.900	.600	6	14	6-102557-3
5 OBSOLETE	4	NONE	NONE	—	.290	.800	.500	5	12	6-102557-2
	4	NONE	NONE	—	.190	.600	.300	3	8	6-102557-1
	4	NONE	NONE	—	.190	.500	.200	2	6	6-102557-0
	4	NONE	NONE	—	.290	.700	.400	4	10	5-102557-9
	4	NONE	NONE	2.890	.190	3.200	2.900	29	60	5-102557-7
5 OBSOLETE	4	NONE	NONE	2.390	.190	2.700	2.400	24	50	5-102557-6
5 OBSOLETE	4	NONE	NONE	1.590	.190	1.900	1.600	16	34	5-102557-5
5 OBSOLETE	4	NONE	NONE	1.390	.190	1.700	1.400	14	30	5-102557-4
5 OBSOLETE	4	NONE	NONE	1.190	.190	1.500	1.200	12	26	5-102557-3
	4	NONE	NONE	.890	.190	1.200	.900	9	20	5-102557-2
	4	NONE	NONE	1.890	.190	2.200	1.900	19	40	5-102557-1
5 OBSOLETE	3	5	NONE	.890	.190	1.200	.900	9	20	2-102557-9
OBSOLETE	3	NONE	NONE	2.790	.190	3.100	2.800	28	58	2-102557-8
OBSOLETE	3	NONE	NONE	2.690	.190	3.000	2.700	27	56	2-102557-7
OBSOLETE	3	NONE	NONE	2.590	.190	2.900	2.600	26	54	2-102557-6
OBSOLETE	3	NONE	NONE	2.490	.190	2.800	2.500	25	52	2-102557-5
OBSOLETE	3	NONE	NONE	2.290	.190	2.600	2.300	23	48	2-102557-4
OBSOLETE	3	NONE	NONE	2.190	.190	2.500	2.200	22	46	2-102557-3
OBSOLETE	3	NONE	NONE	1.990	.190	2.300	2.000	20	42	2-102557-2
OBSOLETE	3	NONE	NONE	1.790	.190	2.100	1.800	18	38	2-102557-1
OBSOLETE	3	NONE	NONE	1.690	.190	2.000	1.700	17	36	2-102557-0
OBSOLETE	3	NONE	NONE	1.490	.190	1.800	1.500	15	32	1-102557-9
OBSOLETE	3	NONE	NONE	1.290	.190	1.600	1.300	13	28	1-102557-8
5 OBSOLETE	3	NONE	NONE	1.090	.190	1.400	1.100	11	24	1-102557-7
OBSOLETE	3	NONE	NONE	.990	.190	1.300	1.000	10	22	1-102557-6
5 OBSOLETE	3	NONE	NONE	—	.490	1.100	.800	8	18	1-102557-5
	3	NONE	NONE	—	.390	1.000	.700	7	16	1-102557-4
	3	NONE	NONE	—	.390	.900	.600	6	14	1-102557-3
	3	NONE	NONE	—	.290	.800	.500	5	12	1-102557-2
	3	NONE	NONE	—	.190	.600	.300	3	8	1-102557-1
	3	NONE	NONE	—	.190	.500	.200	2	6	1-102557-0
	3	NONE	NONE	—	.290	.700	.400	4	10	102557-9
OBSOLETE	3	NONE	NONE	2.090	.190	2.400	2.100	21	44	102557-8
	3	NONE	NONE	2.890	.190	3.200	2.900	29	60	102557-7
	3	NONE	NONE	2.390	.190	2.700	2.400	24	50	102557-6
5 OBSOLETE	3	NONE	NONE	1.590	.190	1.900	1.600	16	34	102557-5
	3	NONE	NONE	1.390	.190	1.700	1.400	14	30	102557-4
	3	NONE	NONE	1.190	.190	1.500	1.200	12	26	102557-3
	3	NONE	NONE	.890	.190	1.200	.900	9	20	102557-2
	3	NONE	NONE	1.890	.190	2.200	1.900	19	40	102557-1
PLATING		ROW Y	ROW X	E	D	C	B	A	NO OF POSN	ASSEMBLY PART NUMBER
		POSTS OMITTED								

THIS DRAWING IS A CONTROLLED DOCUMENT.

DIMENSIONS: INCHES

TOLERANCES UNLESS OTHERWISE SPECIFIED:
0 PLC ± -
1 PLC ± -
2 PLC ± -
3 PLC ± .005
4 PLC ± -
ANGLES ± -

MATERIAL HOUSING: FLAME RETARDANT THERMOPLASTIC, COLOR:BLACK
POSTS: Cu-Ni-Sn

FINISH: SEE TABLE

DWN H MOLL 16JUL87
CHK L A MAYER 16JUL87
APVD T C CLARK 16JUL87

PRODUCT SPEC —
APPLICATION SPEC —
WEIGHT —

TE Connectivity

NAME: HDR ASSY, MOD II, COMPLIANT PIN, DBL ROW, .100X.100 C/L, 4 SIDED SHROUD

SIZE A1 | CAGE CODE 00779 | DRAWING NO C-102557 | RESTRICTED TO —

CUSTOMER DRAWING | SCALE 4:1 | SHEET 1 OF 1 | REV N3