THIS DRAWING IS UNPUBLISHED. RELEASED FOR PUBLICATION 20
© COPYRIGHT 20 BY TYCO ELECTRONICS CORPORATION. ALL RIGHTS RESERVED.

PART NUMBER	REV	TERMINATOR	FEED TYPE	DESCRIPTION
1528660-1	A	LEADMAKER	MECH POST FEED	CUTS CARRIER
1528660-2	A	BENCH	MECH PRE FEED	CUTS CARRIER
1528660-6	A	LEADMAKER	MECH POST FEED	CONTINUOUS CARRIER
7-1528660-1	A	LEADMAKER	MECH POST FEED	-1 AND SPARE PARTS
7-1528660-2	A	BENCH	MECH PRE FEED	-2 AND SPARE PARTS
7-1528660-6	A	LEADMAKER	MECH POST FEED	-6 AND SPARE PARTS
7-1528660-7	A	-	-	SPARE PARTS KIT

CRIMP DATA DELPHI TERMINAL DELPHI CRIMP SPEC 5

TERMINAL NAME: TAXI TERM FEMALE M/PACK 150.2

CRIMP	SIZE	TYPE	RANGE
WIRE	2.03 [.080 IN]	F	0.75mm²-1.00mm²
INSUL	2.54 [.100 IN]	F	2.03-2.40 [.080-.094 IN]

WIRE STRIP LENGTH 4.6 [.181 IN]

APPL INSTRUCTIONS 408-8322 & 408-8490

TERMINAL APPL SPEC — DELPHI DATA SHEET 12124075 6

FEED 9.90 [.390 IN]

TERMINALS APPLIED

TYCO PN	MANUF'S PN	-	-
1949090-1	12124075	-	-
-	-	-	-
-	-	-	-
-	-	-	-

WIRE SIZE	CRIMP HEIGHT *	REF SETTING *
6 1.00mm²	1.20 ±0.05 [.047 ±.002 IN]	B8
6 0.75mm²	1.15 ±0.05 [.045 ±.002 IN]	C1
-	-	-
-	-	-
-	-	-
-	-	-
-	-	-
-	-	-
-	-	-
-	-	-
-	-	-
-	-	-

1. RECOMMENDED SPARE PARTS.
2. GREASE RAM, CAM, CAM FOLLOWER AND FEED ROD LIGHTLY.
3. CERTAIN TERMINALS REQUIRE LUBRICATION. REFER TO THE APPLICATOR INSTRUCTION SHEET FOR MORE INFORMATION.
4. LUBRICATE DAILY PER THE APPLICATOR INSTRUCTION SHEET SUPPLIED WITH THE APPLICATOR.
5. ALL CRIMP DATA SUPPLIED BY DELPHI.
6. SEE DELPHI DATA SHEET FOR SPECIAL WIRE DETAILS.
7. ITEM 53, CUT TO LENGTH AT ASSEMBLY.

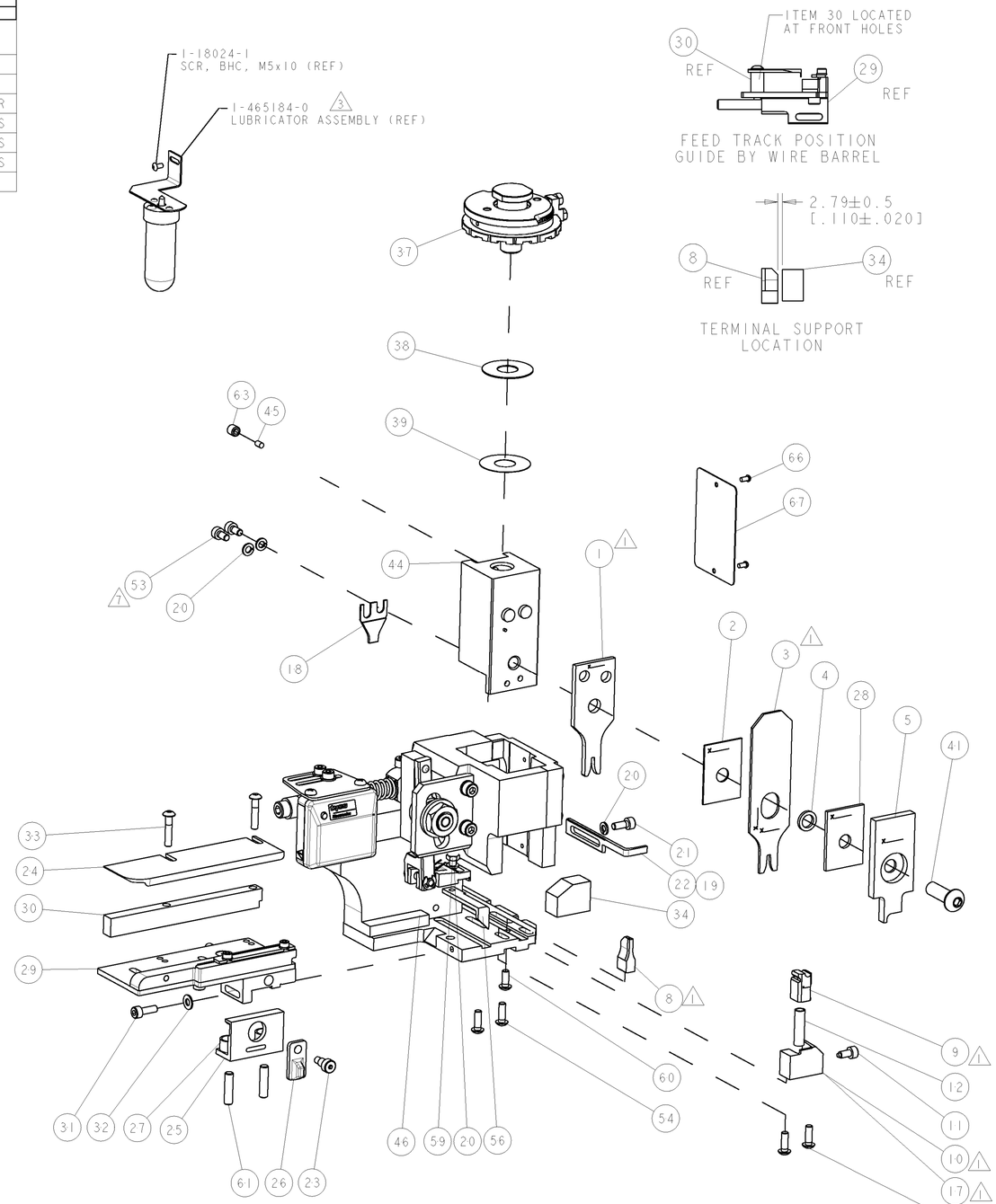

* WARNING
ON INSTALLATION, SET WIRE DISC TO LARGEST WIRE SIZE SETTING. USE OF SETTINGS BELOW MIN. REQUIRED CRIMP HEIGHT SETTING WILL CAUSE DAMAGE TO CRIMP TOOLING.

VIEW B ROTATED 180°

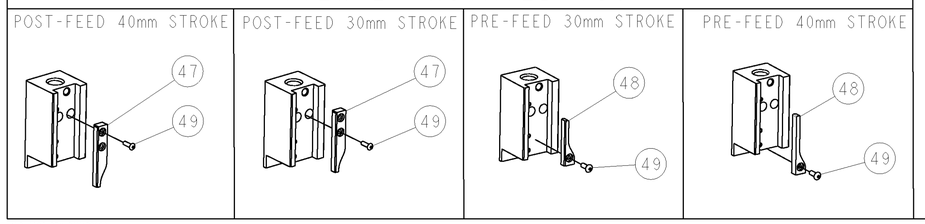

-77	-76	-72	-71	-6	-2	-1	PART NO	DESCRIPTION	ITEM NO
-	-	-	-	-	-	-	-	-	84
-	-	-	-	-	-	-	-	-	83
-	-	-	-	-	-	-	-	-	82
-	-	-	-	-	-	-	-	-	81
-	-	-	-	-	-	-	-	-	80
-	-	-	-	-	-	-	-	-	79
-	-	-	-	-	-	-	-	-	78
-	-	-	-	-	-	-	-	-	77
-	-	-	-	-	-	-	-	-	76
-	-	-	-	-	-	-	-	-	75
-	-	-	-	-	-	-	-	-	74
-77	-76	-72	-71	-6	-2	-1	PART NO	DESCRIPTION	ITEM NO

SET UP GAGE 458637-3

LOC	DIST
A	66

REVISIONS

P	LTR	DESCRIPTION	DATE	DWN	APVD
	A	SEE ECO-06-018244	31JUL2006	DP	MC

-77	-76	-72	-71	-6	-2	-1	PART NO	DESCRIPTION	ITEM NO
-	-	-	-	-	-	-	-	-	73
-	-	-	-	-	-	-	-	-	72
-	1	1	1	1	1	1	1338705-3	DOCUMENTATION PACKAGE	71
-	-	-	-	-	-	-	-	-	70
-	-	-	-	-	-	-	-	-	69
-	-	-	-	-	-	-	-	-	68
-	1	1	1	1	1	1	461264-5	PLATE, IDENTIFICATION	67
-	2	2	2	2	2	2	21017-2	SCREW, DRIVE	66
-	-	-	-	-	-	-	-	-	65
-	-	-	-	-	-	-	-	-	64
-	1	1	1	1	1	1	3-18031-0	SCR, SET, CUP POINT M6 X 6.0	63
-	-	-	-	-	-	-	-	-	62
-	2	2	2	2	2	2	2-18032-5	SCR, SET, FLT POINT M5 X 20.0	61
-	1	1	1	1	1	1	18024-7	SCR, BTN SKT HD CAP (M4 X 10.0)	60
-	1	1	1	1	1	1	5-18022-2	SCR, HEX HD CAP M4 X 8.0	59
-	-	-	-	-	-	-	-	-	58
-	-	-	-	-	-	-	-	-	57
-	1	1	1	1	1	1	1338685-1	PAWL, FEED	56
-	-	-	-	-	-	-	-	-	55
-	4	4	4	4	4	4	18024-8	SCR, BTN SKT HD CAP (M4 X 12.0)	54
7 -	2	2	2	2	2	2	1-18023-0	SCR, SKT HD CAP M4 X 8.0	53
-	-	-	-	-	-	-	-	-	52
-	-	-	-	-	-	-	-	-	51
-	-	-	-	-	-	-	-	-	50
-	1	1	1	1	1	1	18024-3	SCR, BTN SKT HD CAP (M3 X 10.0)	49
-	-	1	-	-	1	-	1338675-1	CAM, UNIVERSAL PRE FEED	48
-	1	-	1	1	-	1	1338676-1	CAM, UNIVERSAL POST-FEED	47
-	1	1	1	1	1	1	1320999-3	APPLICATOR SUBASSEMBLY, HDI	46
-	1	1	1	1	1	1	690191-1	PLUG,NYLON	45
-	1	1	1	1	1	1	1338660-1	RAM	44
-	-	-	-	-	-	-	-	-	43
-	-	-	-	-	-	-	-	-	42
-	1	1	1	1	1	1	2-18024-6	SCR, BTN SKT HD CAP (M8 X 25.0)	41
-	-	-	-	-	-	-	-	-	40
-	1	1	1	1	1	1	690125-1	SHIM SUB-ASSY	39
-	1	1	1	1	1	1	1-469367-2	SHIM	38
-	1	1	1	1	1	1	879103-3	FINE ADJUST HEAD SUBASSY	37
-	-	-	-	-	-	-	-	-	36
-	-	-	-	-	-	-	-	-	35
-	1	1	1	1	1	1	1320934-6	SUPPORT, TERMINAL	34
-	2	2	2	2	2	2	1-18024-0	SCR, BTN SKT HD CAP (M4 X 20.0)	33
-	1	1	1	1	1	1	18027-2	WASHER, FLAT, REG M4	32
-	1	1	1	1	1	1	1-18023-2	SCR, SKT HD CAP M4 X 12.0	31
-	1	1	1	1	1	1	1320908-4	SPACER, STRIP GUIDE	30
-	1	1	1	1	1	1	1633073-1	STRIP GUIDE ASSEMBLY	29
-	1	1	1	1	1	1	1-455888-8	SPACER, CRIMPER	28
-	2	2	2	2	2	2	1-22284-0	SPRING, COMPRESSION	27
-	1	1	1	1	1	1	356835-1	LEVER, DRAG RELEASE	26
-	1	1	1	1	1	1	240792-1	DRAG, TERMINAL	25
-	1	1	1	1	1	1	1320928-1	PLATE, STRIP GUIDE	24
-	1	1	1	1	1	1	980371-4	SCR, SKT HD SHLDR 5.0 DIA X 6.0	23
-	1	-	1	1	-	1	690472-2	STRIPPER	22
-	1	1	1	1	1	1	1-18023-1	SCR, SKT HD CAP M4 X 10.0	21
-	4	4	4	4	4	4	18025-2	WASHER, SPRG LOCK, REG M4	20
-	-	1	-	-	1	-	690472-1	STRIPPER	19
-	1	1	1	1	1	1	1-690518-1	HOLD DOWN, TERMINAL	18
1 -	1	-	-	1	-	-	1338684-1	HOLDER, SHEAR, NO-CUT	17
-	-	-	-	-	-	-	-	-	16
-	-	-	-	-	-	-	-	-	15
-	-	-	-	-	-	-	-	-	14
-	-	-	-	-	-	-	-	-	13
-	1	1	1	1	1	1	3-22280-3	SPRING, COMPRESSION	12
-	1	1	1	1	1	1	356885-4	STOP, SHEAR	11
1 -	-	1	1	-	1	1	1320921-1	SHEAR HOLDER, FRONT, CUT	10
1 -	1	1	1	1	1	1	1-462006-8	FLOATING SHEAR, FRONT	9
1	2	2	2	1	1	1	2-1633139-2	ANVIL, COMBINATION	8
-	-	-	-	-	-	-	-	-	7
-	-	-	-	-	-	-	-	-	6
-	1	1	1	1	1	1	2-455889-0	DEPRESSOR, SHEAR	5
-	1	1	1	1	1	1	1-238011-6	BLOCK, CRIMPER SPACER	4
1	2	2	2	1	1	1	2-683453-9	CRIMPER, INSULATION PREMIUM	3
-	1	1	1	1	1	1	455888-8	SPACER, CRIMPER	2
1	2	2	2	1	1	1	4-456405-5	CRIMPER, WIRE PREMIUM	1
-77	-76	-72	-71	-6	-2	-1	PART NO	DESCRIPTION	ITEM NO

THIS DRAWING IS A CONTROLLED DOCUMENT FOR TYCO ELECTRONICS CORPORATION. IT IS SUBJECT TO CHANGE AND THE CONTROLLING ENGINEERING ORGANIZATION SHOULD BE CONTACTED FOR THE LATEST REVISION.

DIMENSIONS: mm [IN]

TOLERANCES UNLESS OTHERWISE SPECIFIED: 0 PLC ±- ; 1 PLC ±- ; 2 PLC ±- ; 3 PLC ±- ; 4 PLC ±- ; ANGLES ±-

MATERIAL - / -

FINISH - / -

DWN 29JUN2006 D.PROUSE
CHK
APVD 29JUN2006 M.CLIFFORD
PRODUCT SPEC -
APPLICATION SPEC See Table
WEIGHT -
CUSTOMER DRAWING

tyco Electronics
Tyco Electronics
Harrisburg, PA 17105-3608

FINE ADJUST SIDE FEED
HDI APPLICATOR

SIZE A | CAGE CODE 00779 | DRAWING NO C-458637 | INSTRUCTED TO -

SCALE 3:5 | SHEET 1 OF 1 | REV A

OBSOLETE
NOT the LATEST
REVISION

AMP 4805 REV 31MAR2000

Pro/ENGINEER DRAWING