One-touch Fittings
Series KQ2
Applicable Tubing: Metric Size
Connection Thread: M, R, Rc

How to Order

KQ 2 H 06 — 01 S

- **KQ**: One-touch fittings
- **2**: Product's color
- **H**: Model
- **06**: Applicable tubing O.D.
- **01**: Port size/Applicable tubing O.D.
- **S**: With thread seal

Product's color

Symbol	Body	Release button
2	White	Light gray
Nil	Black	Blue

Applicable tubing O.D.

23	ø3.2
04	ø4
06	ø6
08	ø8
10	ø10
12	ø12
16	ø16

Port size/Applicable tubing O.D.

Thread connection	M5	M5 x 0.8	
	M6	M6 x 1.0	
	01	R 1/8, Rc 1/8	
	02	R 1/4, Rc 1/4	
	03	R 3/8, Rc 3/8	
	04	R 1/2, Rc 1/2	
Tubing (Rod) connection	00	Same dia. tubing	
	04	ø4	(Reducer) Different dia. tubing
	06	ø6	
	08	ø8	
	10	ø10	
	12	ø12	
	16	ø16	
	99	Same dia. rod	

With thread seal

Nil	None
S	With thread seal

Note) Port size with seal: Only
R 1/8
R 1/4
R 3/8
R 1/2

Model

H	Male connector	T	Male branch tee
	Straight union		Union tee
	Different diameter straight		Different diameter tee * Note)
S	Hex. socket head male connector	TW	Cross*
F	Female connector	TX	Different diameter cross*
L	Male elbow	TY	Different diameter cross*
	Union elbow	Y	Male run tee
	Plug-in elbow	D	Male delta union
	Reducer elbow		Delta union
LU	Male branch connector	U	Branch
	Branch union elbow		Union "Y"
K	45° male elbow		Different dia. union "Y"
V	Universal male elbow		Plug-in "Y"
VS	Hexagon socket head universal male elbow	UD	Delta branch
VF	Universal female elbow		Different dia. double union "Y"
LF	Female elbow	XD	Double plug-in "Y"
VD	Double universal male elbow	X	Different diameter plug-in "Y"
VT	Triple universal male elbow	R	Plug-in reducer
Z	Branch universal male elbow	E	Bulkhead union
ZF	Branch universal female elbow		Bulkhead connector
ZD	Double branch universal male elbow	LE	Bulkhead male elbow
ZT	Triple branch universal male elbow		
W	Extended plug-in elbow		
	Extended male elbow		

* Available only for white color body.
Note) KQT06-04, KQT08-06, KQT10-08, and KQT12-10 are available as made to order.

Accessory

Symbol	Name
KQ2N	Nipple
	Reducer nipple
	Adaptor
KQ2C	Tube cap
KQ2C	Color cap
KQ2P	Plug (White)
KQP	Plug (Blue)

Use the below part number to order the gasket for M5 and M6 threads.
Gasket for M5 thread: M-5G2
Gasket for M6 thread: M-6G

Series KQ2: White body
Series KQ : Black body

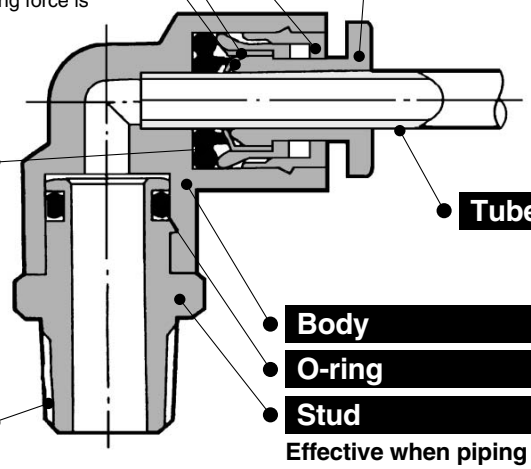

Guide

Collet

Chuck

Suitable for use with nylon, soft nylon and urethane. Large retaining force.

Has large retaining force while holding force is increased by the collet.

Release button

Series KQ2: Light gray
Series KQ : Blue
Light force for removal

When the fitting is removed from the tube, the chuck and collet are released, thus preventing them from biting into the tube excessively.

Seal

Can be used for a wide range of pressures from a low vacuum up to a pressure of 1.0 MPa

The use of a special profile ensures sealing and reduces resistance when the tube is inserted.

Tube

Body

O-ring

Stud

Effective when piping in a confined space.

The body and the threaded portion can rotate. (To the degree for positioning)

Connection thread

M, R, Rc

PAT.

One-touch IN/OUT connection. Possible to use in vacuum to –100 kPa

- **Applications for metric size tubing**
- **Applicable tubing material—Nylon, Soft nylon, Polyurethane**

Made to Order P. 15-2-30

Applicable Tubing

Tubing material	Nylon, Soft nylon, Polyurethane
Tubing O.D.	ø3.2, ø4, ø6, ø8, ø10, ø12, ø16

Product's Color

Series	Body	Release button
Series KQ2	White	Light gray
Series KQ	Black	Blue

Specifications

Fluid		Air/Water Note)
Maximum operating pressure		1.0 MPa
Operating vacuum pressure		–100 kPa
Proof pressure		3.0 MPa
Ambient and fluid temperature		–5 to 60°C, Water: 0 to 40°C (No freezing)
Thread	Mounting section	JIS B 0203 (Taper thread for piping) JIS B 0209 Class 2 (Metric coarse thread)
	Nut section	JIS B 0211 Class 2 (Metric fine thread)
Seal (Thread portion)		With seal or none

Note) Applicable for general industrial water. Please consult with SMC if using for other kinds of fluid. Also, the surge pressure must be under the maximum operating pressure.

Principal Parts Material

Body	C3604BD, PBT, PP
Stud	C3604BD (Thread portion)
Chuck	Stainless steel 304
Guide	Stainless steel 304, C3604BD, POM
Collet, Release button	POM
Seal, O-ring	NBR
Gasket	Stainless steel 304, NBR

Model

Hex. socket head male connector

KQ2S P. 14

Internal hex. allows thread connection by using an allen wrench for confined spaces.

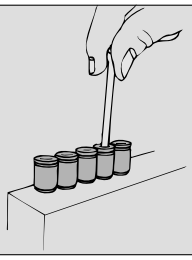

Universal male elbow

KQ2V P. 17

Universal male elbow allows thread connection by using a socket wrench for confined spaces.

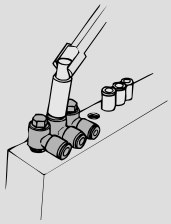

45° male elbow

KQ2K P. 16

Use to pipe in 45° direction from female thread. Model in-between of male connector and male elbow.

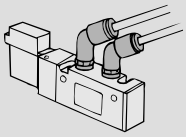

Extended male elbow

KQ2W P. 22

Basically, it is used together with male elbow. Different point is that it is used for with fittings to avoid from interfering with each other by making the piping two-level.

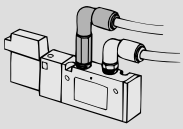

Bulkhead union

KQ2E P. 28

Use to connect tubes through a panel.

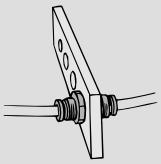

Bulkhead connector

KQ2E P. 28

Use to connect male thead and tube through a panel.

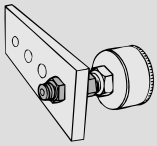

Nipple

KQ2N P. 29

Use to connect One-touch fittings.

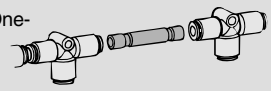

Reducer nipple

KQ2N P. 29

Use to connect One-touch fittings that are different tubing O.D.s.

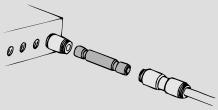

Male connector

KQ2H P. 14

Use to pipe in the same direction from female thread. Most general style.

Male elbow

KQ2L P. 15

Use to pipe at right angles to female thread. Most general style.

Male branch tee

KQ2T

P. 22

Use to branch line from female thread in both 90° directions.

Female connector

KQ2F P. 14

Use to pipe from male thread such as pressure gauge.

Union elbow

KQ2L P. 20

Use to connect tubes at right angles.

Union tee

KQ2T

P. 23

Use to connect tubes in both 90° directions.

Straight union

KQ2H P. 15

Use to connect tubes in the same direction.

Plug-in elbow

KQ2L

P. 21

Use to change by 90° in a tube fetching from One-touch direction fittings.

Different diameter tee

KQ2T

P. 23

Use to connect tubes with size down in both 90° directions.

Different diameter straight

KQ2H P. 15

Use to connect different sized tubes.

Reducer elbow

KQ2L

P. 21

Use to change by 90° in a tube fetching direction from One touch fittings and to size down.

Different diameter tee

KQ2T

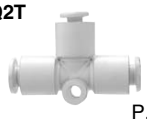

P. 23

Use to branch line with size down in both side 90° direction.

Cross

KQ2TW

P. 23

Use to four-branch line.

Different diameter cross

KQ2TX

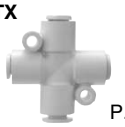

P. 23

Use to connect tubes with size down in all 90° directions.

Different diameter cross

KQ2TY

P. 24

Use to branch line with size down in three directions.

Hexagon socket head universal male elbow
KQ2VS P. 17

Hex. on the top allows thread connection by using an allen wrench for confined spaces.

Male branch connector
KQ2LU P. 16

Use to branch piping at right angles to female thread.

Universal female elbow
KQ2VF P. 18

Use to branch line in the same direction or at the right angles from male or female thread. Multiplex connection possible.

Female elbow
KQ2LF P. 18

Use to pipe at right angles to male thread.

Double universal male elbow
KQ2VD P. 18

Use to branch line at right angles to female thread. Two individual parts rotate 360°.

Triple universal male elbow
KQ2VT P. 19

Use to three-branch line at right angles from female thread. Three individual parts rotate 360°.

Branch universal male elbow
KQ2Z P. 19

Hexagonal head allows thread connection by using a box wrench. Use for branch connection.

Branch universal female elbow
KQ2ZF P. 19

Use to branch line in the same direction or at right angles from male or female thread. Multiplex connection possible.

Double branch universal male elbow
KQ2ZD P. 20

Use to four-branch line at right angles from female thread. Two individual parts rotate 360°.

Male run tee
KQ2Y P. 24

Use to branch line in the same direction from female thread and in 90° direction.

Triple branch universal male elbow
KQ2ZT P. 20

Use to six-branch line at right angles from female thread. Three individual parts rotate 360°.

Branch union elbow
KQ2LU P. 21

Use to branch line at right angles.

Extended plug-in elbow
KQ2W P. 21

When the elbow extends over a standard elbow for ease of connection/ disconnection of tube.

Male delta union
KQ2D P. 25

Use to branch line in 90° direction from female thread.

Delta union
KQ2D P. 25

Use to branch in tripple 90° direction.

Delta branch
KQ2UD P. 26

Use to four-branch line in the same direction from female thread.

Different dia. double union "Y"
KQ2UD P. 26

Use to four-branch line in the same direction with size down.

Different diameter plug-in "Y"
KQ2X P. 27

Use to branch line from One-touch fitting with size down.

Double plug-in "Y"
KQ2XD P. 27

Use to four-branch line from One-touch fitting.

Gasket/Seal for M5 and M6 thread
Part no.: M-5G2 (For M5 thread)
M-6G (For M6 thread)
Material: Stainless steel 304, NBR

Union "Y"
KQ2U P. 26

Use to branch line in the same direction.

Different dia. union "Y"
KQ2U P. 26

Use to branch line with size down in the same direction.

Plug-in "Y"
KQ2U P. 27

Use to branch line in the same direction from One-touch fittings.

Branch "Y"
KQ2U P. 25

Use to branch line in the same direction from female thread.

Plug-in reducer
KQ2R P. 28

Use to change size of One-touch fittings.

Bulkhead male elbow
KQ2LE P. 28

Use to connect tubes through a panel, changing by 90° in a tube fetching direction.

Adaptor
KQ2N P. 28

Use to connect fitting and R female thread.

Tube cap
KQ2C P. 29

Use to plug unused tube.

Color cap
KQ2C P. 29
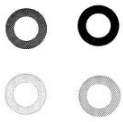
Mounted on the release button corresponding to its applications. Distinguished by color.

Plug
KQ2P, KQP P. 29

Use to plug unused One-touch fittings.
KQP (Blue)
KQ2P (White)

Male Connector: KQ2H

<M5, M6>

<R>

Applicable tubing O.D. (mm)	Connection thread R	Model	H (width across flats)	(1) øD	L	A*	M	Effective area (2) (mm²) Nylon	Effective area (2) (mm²) Urethane	Weight (g)
3.2	M5 x 0.8	**KQ2H23-M5**	7	7	16.7	13.6	12.7	3	2.5	2.1
	1/8	**KQ2H23-01S**	10	—	22	18	15.5	3.4	2.9	9
	1/4	**KQ2H23-02S**	14	—	19.5	13.5				16
4	M5 x 0.8	**KQ2H04-M5**	8	8	17	13.9	12.7	4	4	2.4
	M6 x 1.0	**KQ2H04-M6**	8		18					2.5
	1/8	**KQ2H04-01S**	10	—	22	18	16	5.6	4	9
	1/4	**KQ2H04-02S**	14	—	19.5	13.5				16
6	M5 x 0.8	**KQ2H06-M5**	10	10	17.8	14.7	13.5	4	4	3.3
	M6 x 1.0	**KQ2H06-M6**	10		19	14.9				3.4
	1/8	**KQ2H06-01S**	12	—	22.5	18.5	17	13.1	10.4	16
	1/4	**KQ2H06-02S**	14	—	23	17				14
	3/8	**KQ2H06-03S**	17	—	22	15.5				27
8	1/8	**KQ2H08-01S**	14	—	28	24	18.5	26.1	18.0	21
	1/4	**KQ2H08-02S**			26.5	20.5				19
	3/8	**KQ2H08-03S**	17		22	15.5				26
10	1/8	**KQ2H10-01S**	17	—	30	26	21	26.1	26.1	19
	1/4	**KQ2H10-02S**			33.5	27.5		41.5	29.5	30
	3/8	**KQ2H10-03S**			29	22.5				30
	1/2	**KQ2H10-04S**	22		27	19				53
12	1/4	**KQ2H12-02S**	19	—	34.5	28.5	22	58.3	46.1	42
	3/8	**KQ2H12-03S**			30	23.5				34
	1/2	**KQ2H12-04S**	22			22				51
16	3/8	**KQ2H16-03S**	24	25.7	39.5	33	25	81	(81)	61
	1/2	**KQ2H16-04S**			35.5	27.5		113	(96)	47

<M5, M6>

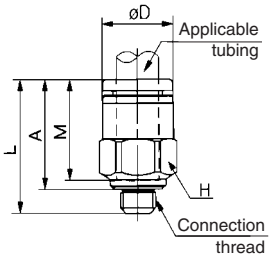

<R>

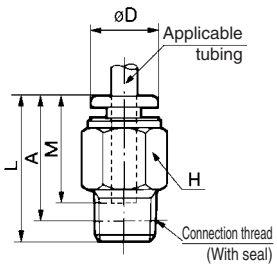

∗ Reference dimensions after R thread installation.
Note 1) D: Max. diameter Note 2) ( ): Values for soft nylon.

Hexagon Socket Head Male Connector: KQ2S

<M5, M6>

<R>

Applicable tubing O.D. (mm)	Connection thread P	Model	H (width across flats)	(1) øD1	øD2	L	A*	M	Effective area (2) (mm²) Nylon	Effective area (2) (mm²) Urethane	Weight (g)
4	M5 x 0.8	**KQ2S04-M5**	2.5	8	—	18.7	15.6	12.7	4	4	2.7
	M6 x 1.0	**KQ2S04-M6**	3			18.2	14.1				2.8
	1/8	**KQ2S04-01S**		9.8		23	19	16	4.1	3.6	8
6	M5 x 0.8	**KQ2S06-M5**	2.5	10	—	19.5	16.4	13.5	4	4	3.3
	M6 x 1.0	**KQ2S06-M6**	3			19.1	15				3.4
	1/8	**KQ2S06-01S**	4	11.8		24	20	17	10.0	9.9	9
	1/4	**KQ2S06-02S**		13.8		24	18		10.7	10.0	15
8	1/8	**KQ2S08-01S**	5	14	—	28	24	18.5	17.2	16.2	12
	1/4	**KQ2S08-02S**	6			25.5	19.5		23.3		11
	3/8	**KQ2S08-03S**		17		27.5	21				24
10	1/8	**KQ2S10-01S**	5	17	—	30	26	21	17.2	16.2	18
	1/4	**KQ2S10-02S**	8			27.5	21.5		39.0	26.6	12
	3/8	**KQ2S10-03S**					21				19
	1/2	**KQ2S10-04S**		22		28	20				35
12	1/4	**KQ2S12-02S**	8	19	—	33.5	27.5	22	46.0	44.5	23
	3/8	**KQ2S12-03S**	10			29	22.5		60.0		18
	1/2	**KQ2S12-04S**		22		28	20				30
16	3/8	**KQ2S16-03S**	10	25.7	24	39	32.5	25	81	(81)	42
	1/2	**KQ2S16-04S**	12			35	27		113	(96)	34

<M5, M6> <R>

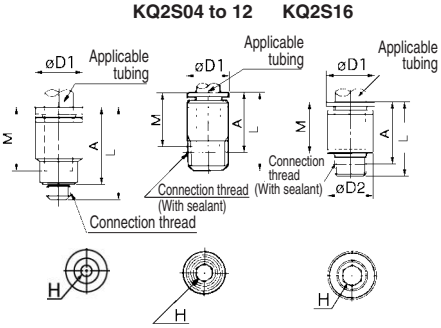

∗ Reference dimensions after R thread installation.
Note 1) øD: Max. diameter
Note 2) ( ): Values for soft nylon.

Female Connector: KQ2F

Applicable tubing O.D. (mm)	Connection thread Rc	Model	H (width across flats)	(1) øD1	øD2	L1	L2	M	Effective area (2) (mm²) Nylon	Effective area (2) (mm²) Urethane	Weight (g)
4	1/8	**KQ2F04-01**	14	—	10	27	11	16	5.6	4	15
	1/4	**KQ2F04-02**	17			31	14				23
6	1/8	**KQ2F06-01**	14	—	12	27.5	11	17	13.1	10.4	15
	1/4	**KQ2F06-02**	17			31	13				22
	3/8	**KQ2F06-03**	19			33.5	15				25
8	1/8	**KQ2F08-01**	14	—	14	29	11	18.5	26.1	18.0	17
	1/4	**KQ2F08-02**	17			32.5	13				24
	3/8	**KQ2F08-03**	19			33.5	14				24
10	1/4	**KQ2F10-02**	17	—	17	34.5	14	21	41.5	29.5	27
	3/8	**KQ2F10-03**	19			36.5	15				30
12	1/4	**KQ2F12-02**	19	—	19	35	14	22	58.3	46.1	36
	3/8	**KQ2F12-03**				37					31
	1/2	**KQ2F12-04**	24			41	18				52
16	3/8	**KQ2F16-03**	24	24	25.7	38	15	25	81	(81)	59
	1/2	**KQ2F16-04**				43	19		113	(96)	58

KQ2F04 to 12

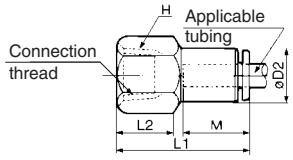

KQ2F16

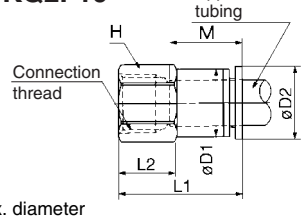

Note 1) øD2: Max. diameter
Note 2) ( ): Values for soft nylon

Straight Union: KQ2H

Applicable tubing O.D. (mm)	Model	øD (1)	L	M	Effective area (2) (mm²) Nylon	Effective area (2) (mm²) Urethane	Weight (g)
3.2	**KQ2H23-00**	9.6	31.5	15.5	3.4	2.9	3
4	**KQ2H04-00**	10.4	32.5	16	5.6	4	3
6	**KQ2H06-00**	12.8	34.5	17	13.1	10.4	4
8	**KQ2H08-00**	15.2	38.5	18.5	26.1	18.0	6
10	**KQ2H10-00**	18.5	42.5	21	41.5	29.5	11
12	**KQ2H12-00**	20.9	44.5	22	58.3	46.1	14
16	**KQ2H16-00**	26.5	51	25	113	(96)	24

Note 1) øD: Max. diameter
Note 2) ( ): Values for soft nylon.

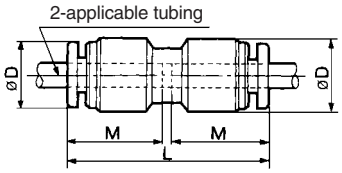

Different Diameter Straight: KQ2H

Applicable tubing O.D. (mm) ⓐ	Applicable tubing O.D. (mm) ⓑ	Model	Note) øD	L	M1	M2	Effective area (mm²) Nylon	Effective area (mm²) Urethane	Weight (g)
3.2	4	**KQ2H23-04**	10.4	32.5	15.5	16	3.4	2.9	3
4	6	**KQ2H04-06**	12.8	34.5	16	17	5.6	5.6	5
6	8	**KQ2H06-08**	15.2	38.5	17	18.5	13.1	10.4	6
8	10	**KQ2H08-10**	18.5	42	18.5	21	26.1	18.0	11
10	12	**KQ2H10-12**	20.9	44.5	21	22	41.5	29.5	14
12	16	**KQ2H12-16**	26.5	56.5	22	25	58.3	46.1	47

Note) øD: Max. diameter

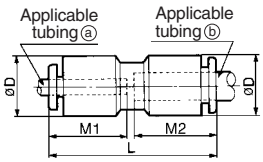

Male Elbow: KQ2L

<M5>

<M6>

<R>

Applicable tubing O.D. (mm)	Connection thread R	Model	H (width across flats)	(1) øD1	øD2	L1	L2	A*	M	Effective area (2) (mm²) Nylon	Effective area (2) (mm²) Urethane	Weight (g)
3.2	M5 x 0.8	**KQ2L23-M5**	7	8.5	—	15.3	13.2	14.3	12.7	2.6	2.2	2.5
	1/8	**KQ2L23-01S**	10	9.6	10	17.5	21.5	22.5	15.5	3	2.5	8
	1/4	**KQ2L23-02S**	14				25.5	24.5				18
4	M5 x 0.8	**KQ2L04-M5**	7	9.3	—	15.6	13.7	15.3	12.7	3.5	3.5	2.7
	M6 x 1.0	**KQ2L04-M6**	8				14.7					3.6
	1/8	**KQ2L04-01S**	10	10.4	10	18	22	23	16	4.2	4.2	10
	1/4	**KQ2L04-02S**	14				26	25				19
6	M5 x 0.8	**KQ2L06-M5**	7	11.6	—	16.1	14.7	17.4	13.5	3.5	3.5	3.2
	M6 x 1.0	**KQ2L06-M6**	8				15.7					4.1
	1/8	**KQ2L06-01S**	10	12.8	10	20	23	25.5	17	11.4	9.0	12
	1/4	**KQ2L06-02S**	14				27	27.5				22
	3/8	**KQ2L06-03S**	17				29	29				33
8	1/8	**KQ2L08-01S**	12	15.2	12	23	24.5	28	18.5	21.6	14.9	13
	1/4	**KQ2L08-02S**	14				28.5	30				21
	3/8	**KQ2L08-03S**	17				30.5	31.5				35
10	1/8	**KQ2L10-01S**	17	18.5	17	26.5	27	32	21	21.6	14.9	25
	1/4	**KQ2L10-02S**					30	33		35.2	25.0	26
	3/8	**KQ2L10-03S**					32	34.5				36
	1/2	**KQ2L10-04S**	22				36	37				63
12	1/4	**KQ2L12-02S**	17	20.9	17	28.5	31	35.5	22	50.2	39.7	28
	3/8	**KQ2L12-03S**					33	37				38
	1/2	**KQ2L12-04S**	22				37	39.5				65
16	3/8	**KQ2L16-03S**	22	26.5	20.9	34	38	44.5	25	71	(71)	101
	1/2	**KQ2L16-04S**					41	46		100	(84)	105

∗ Reference dimensions after R thread installation.
Note 1) øD1: Max. diameter
Note 2) ( ): Values for soft nylon.

<M5, M6>

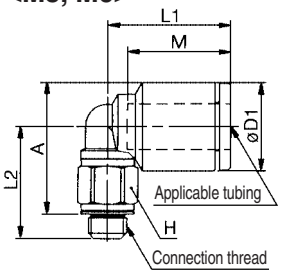

<R>

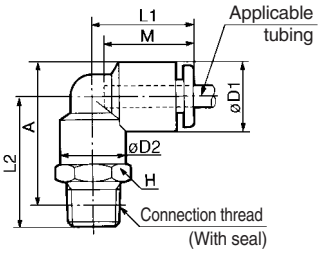

Male Branch Connector: KQ2LU

<M5, M6>

<R>

Applicable tubing O.D. (mm)	Connection thread R	Model	H (width across flats)	Note) øD	L1	L2	L3	A*	M	P	Effective area (mm²) Nylon	Effective area (mm²) Urethane	Weight (g)
4	M5 x 0.8	**KQ2LU04-M5**	11	10.4	18.5	24	29.5	25.5	16	10.4	4.3	4.1	10
	M6 x 1.0	**KQ2LU04-M6**				24.5	30						
	1/8	**KQ2LU04-01S**				26.5	32	27.5			6.0	4.1	12
	1/4	**KQ2LU04-02S**	14			30.5	36	30					21
6	M5 x 0.8	**KQ2LU06-M5**	13	12.8	21	26.5	33	29.5	17	12.8	4.3	4.3	13
	M6 x 1.0	**KQ2LU06-M6**				27	33.5						
	1/8	**KQ2LU06-01S**				29.5	36	32			13.9	11.0	15
	1/4	**KQ2LU06-02S**	14			33	39.5	33.5					22
	3/8	**KQ2LU06-03S**	17			35	41.5	35					35
8	1/8	**KQ2LU08-01S**	17	15.2	24	34	41.5	38	18.5	15.2	26.3	18.2	27
	1/4	**KQ2LU08-02S**				37	44.5	38.5					
	3/8	**KQ2LU08-03S**				38	45.5	39					35
10	1/4	**KQ2LU10-02S**	19	18.5	27	40	49.5	43.5	21	18.5	40.8	29.0	41
	3/8	**KQ2LU10-03S**				41	50.5	44					42
	1/2	**KQ2LU10-04S**	22			44.5	54	45.5					64
12	1/4	**KQ2LU12-02S**	22	20.9	29	42.5	53	47	22	20.9	57.2	45.2	57
	3/8	**KQ2LU12-03S**				43.5	54	47.5					58
	1/2	**KQ2LU12-04S**				46.5	57	49					65

* Reference dimensions after R thread installation.
Note) øD: Max. diameter

<M5, M6>

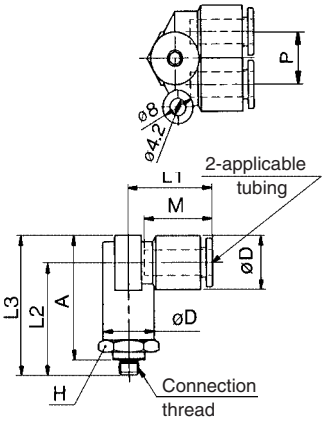

<R>

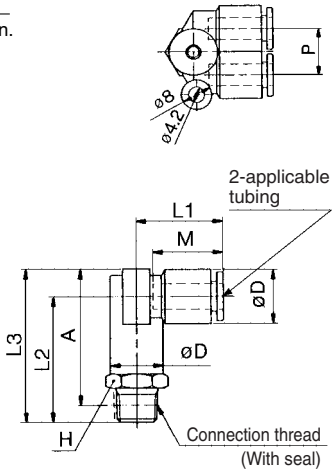

45° Male Elbow: KQ2K

<M5, M6>

<R>

Applicable tubing O.D. (mm)	Connection thread R	Model	H (width across flats)	øD1 (1)	øD2	L1	L2	A*	M	Effective area (2) (mm²) Nylon	Effective area (2) (mm²) Urethane	Weight (g)
4	M5 x 0.8	**KQ2K04-M5**	8	10.4	8	17	14.5	26	16	3.4	3.4	4
	M6 x 1.0	**KQ2K04-M6**					15					5
	1/8	**KQ2K04-01S**	10		10		20.5	32				10
	1/4	**KQ2K04-02S**	14				24.5	34				19
6	M5 x 0.8	**KQ2K06-M5**	8	12.8	8	18	14.5	27.5	17	3.4	3.4	6
	M6 x 1.0	**KQ2K06-M6**				18.5	15					5
	1/8	**KQ2K06-01S**	10		10	18	20.5	33		8.7	6.9	12
	1/4	**KQ2K06-02S**	14				24.5	35				10
	3/8	**KQ2K06-03S**	17				26.5	36.5				33
8	1/8	**KQ2K08-01S**	12	15.2	12	20.5	22	37	18.5	19.7	19.7	13
	1/4	**KQ2K08-02S**	14				26	39				21
	3/8	**KQ2K08-03S**	17				28	41				35
10	1/8	**KQ2K10-01S**	17	18.5	17	24	24	42	21	30.9	23.2	25
	1/4	**KQ2K10-02S**					27	43.5				26
	3/8	**KQ2K10-03S**					29	45				36
	1/2	**KQ2K10-04S**	22				33	47.5				63
12	1/4	**KQ2K12-02S**	17	20.9	17	25	27.5	45.5	22	44.5	35.1	28
	3/8	**KQ2K12-03S**					29.5	47.5				38
	1/2	**KQ2K12-04S**	22				33.5	49.5				65
16	3/8	**KQ2K16-03S**	22	26.5	20.9	30	32	55	25	65.8	(65.8)	52
	1/2	**KQ2K16-04S**					35	56.5		91.9	(78.3)	58

* Reference dimensions after R thread installation.
Note 1) øD: Max. diameter
Note 2) ( ): Values for soft nylon.

<M5, M6>

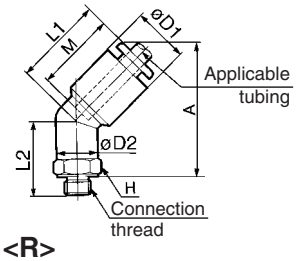

<R>

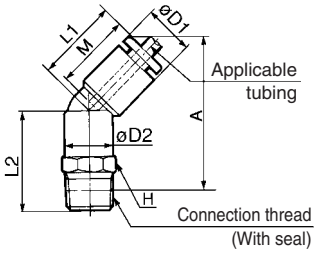

Universal Male Elbow: KQ2V

<M5>

<R>

Applicable tubing O.D. (mm)	Connection thread R	Model	H (width across flats)	(1) øD1	øD2	L1	L2	L3	A*	M	Effective area (2) (mm²) Nylon	Effective area (2) (mm²) Urethane	Weight (g)
4	M5 x 0.8	**KQ2V04-M5**	8	10.4	9.8	20.5	11	18.5	15	16	2.9	2.9	6
	1/8	**KQ2V04-01S**			13.4	22	14.5	26.5	22.5				14
6	M5 x 0.8	**KQ2V06-M5**	8	12.8	9.8	23.5	12	18.5	15	17	3.8	3.8	7
	1/8	**KQ2V06-01S**			13.4	24	14.5	26.5	22.5		7.5	5.9	15
	1/4	**KQ2V06-02S**	10		15.4	23.5	18.5	31	25				26
8	1/8	**KQ2V08-01S**	12	15.2	17.6	28.5	15.5	28.5	24.5	18.5	16	11.2	24
	1/4	**KQ2V08-02S**					18.5	31.5	25.5				30
	3/8	**KQ2V08-03S**	14		20.6	27.5	20.5	36.5	30		20.5	14.3	47
10	1/4	**KQ2V10-02S**	14	18.5	20.6	31	19.5	35.5	29.5	21	27	20.3	40
	3/8	**KQ2V10-03S**					20.5	36.5	30				49
12	3/8	**KQ2V12-03S**	17	20.9	25.2	34	22	38.5	32	22	39	30.8	63
	1/2	**KQ2V12-04S**					25	41.5	33.5				80
16	3/8	**KQ2V16-03S**	21	26.5	32.3	39	26.5	46.5	40.5	25	55	(55)	103
	1/2	**KQ2V16-04S**					29.5	49.5	41.5		78	(65)	110

* Reference dimensions after R thread installation.
Note 1) øD: Max. diameter
Note 2) ( ): Values for soft nylon.

<M5>

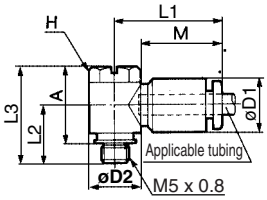

<R>

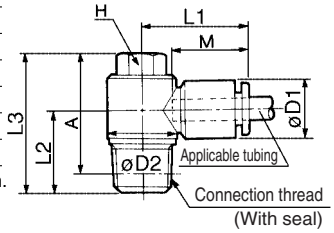

Hexagon Socket Head Universal Male Elbow: KQ2VS

<M5>

<R>

Applicable tubing O.D. (mm)	Connection thread R	Model	H (width across flats)	Note) øD1	øD2	L1	L2	L3	A*	M	Effective area (mm²) Nylon	Effective area (mm²) Urethane	Weight (g)
4	M5	**KQ2VS04-M5**	4	10.4	9.8	20.5	10.5	18	15	16	2.9	2.9	6
	1/8	**KQ2VS04-01S**	6		13.4	22	14.5	26.5	22.5				14
6	M5	**KQ2VS06-M5**	4	12.8	9.8	23.5	12	18	15	17	3.8	3.8	7
	1/8	**KQ2VS06-01S**	6		13.4	24	14.5	26.5	22.5		7.5	5.9	15
	1/4	**KQ2VS06-02S**			15.3	23.5	18.5	27	21				22
8	1/8	**KQ2VS08-01S**	8	15.2	17.6	28.5	15.5	27	23	18.5	16	11.2	24
	1/4	**KQ2VS08-02S**					18.5	30	24				30
	3/8	**KQ2VS08-03S**			20.6	27.5	20.5	32.5	26		20.5	14.3	47
10	1/4	**KQ2VS10-02S**	8	18.5	20.6	31	19.5	31.5	25	21	27	20.3	32
	3/8	**KQ2VS10-03S**					20.5	32.5	26				39
12	3/8	**KQ2VS12-03S**	10	20.9	25.2	34	22	36	30	22	39	30.8	48
	1/2	**KQ2VS12-04S**					25	39	31				67

* Reference dimensions after R thread installation.
Note) øD: Max. diameter

<M5>

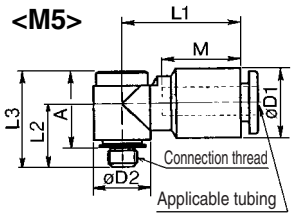

<R>

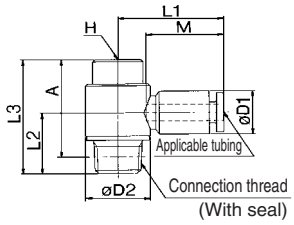

Universal Female Elbow: KQ2VF

<M5>

<R>

Applicable tubing O.D. (mm)	Connection thread Rc R	Model	H (width across flats)	Note) øD1	øD2	L1	L2	L3	A	M*	Weight (g)
4	M5 x 0.8	KQ2VF04-M5	8	10.4	9.8	20.5	11	20	16	16	6
	1/8	KQ2VF04-01S	14		13.4	22	15.5	29.5	25.5		19
6	M5 x 0.8	KQ2VF06-M5	8	12.8	9.8	23.5	12.5	20	16	17	7
	1/8	KQ2VF06-01S	14		13.4	24.5	15.5	29.5	25.5		19
	1/4	KQ2VF06-02S	17		17.6	25	20	38.5	32.5		36
8	1/8	KQ2VF08-01S	17	15.2	17.6	28.5	17	31	27	18.5	29
	1/4	KQ2VF08-02S					20	38.5	32.5		37
	3/8	KQ2VF08-03S	22		25.2	29.5	25.5	45.5	39		66
10	1/4	KQ2VF10-02S	19	18.5	20.6	31.5	22	41	35	21	48
	3/8	KQ2VF10-03S	22		25.2		24.5	45.5	39		68
12	3/8	KQ2VF12-03S	22	20.9	25.2	34	24.5	45.5	39	22	70
	1/2	KQ2VF12-04S	24		27	35	25.5	50	42		93

* Reference dimensions after R thread installation.
Note) øD1: Max. diameter

<M5>

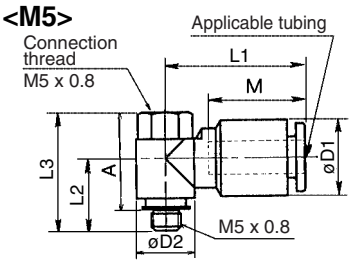

<R>

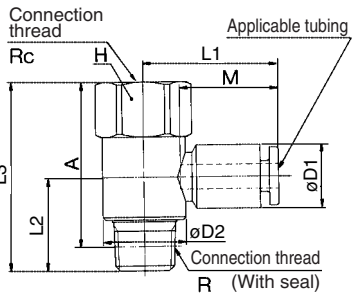

Female Elbow: KQ2LF

<M5, M6>

<Rc>

Applicable tubing O.D. (mm)	Connection thread Rc	Model	H (width across flats)	Note) øD1	øD2	L1	L2	M	Effective area (mm²) Nylon	Effective area (mm²) Urethane	Weight (g)
4	M5 x 0.8	KQ2LF04-M5	8	10.4	8	18.5	14.5	16	3.5	3.5	5
	M6 x 1.0	KQ2LF04-M6					15.5				
	1/8	KQ2LF04-01	14		10		21		4.2	4.2	13
	1/4	KQ2LF04-02	17				24.5				20
6	M5 x 0.8	KQ2LF06-M5	8	12.8	8	20.5	15	17	3.5	3.5	5
	M6 x 1.0	KQ2LF06-M6					16				6
	1/8	KQ2LF06-01	14		10		22		11.4	9.0	13
	1/4	KQ2LF06-02	17				25.5				20
	3/8	KQ2LF06-03	19				26				
8	1/8	KQ2LF08-01	14	15.2	12	23.5	23	18.5	21.6	14.9	16
	1/4	KQ2LF08-02	17				26.5				22
	3/8	KQ2LF08-03	19				27				23
10	1/4	KQ2LF10-02	17	18.5	17	26.5	28	21	21.6	14.9	27
	3/8	KQ2LF10-03	19				28.5		35.2	25.0	
	1/2	KQ2LF10-04	24				32.5				46
12	1/4	KQ2LF12-02	17	20.9	17	28.5	29.5	22	50.2	39.7	29
	3/8	KQ2LF12-03	19				30				
	1/2	KQ2LF12-04	24				34				48

Note) øD1: Max. diameter

<M5>

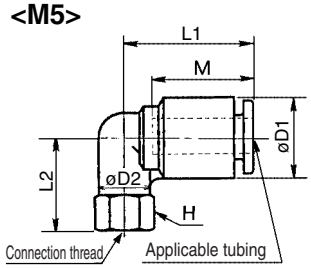

<R>

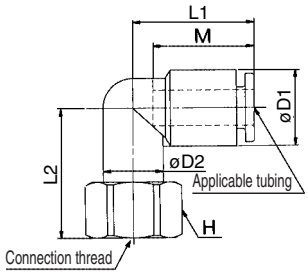

Double Universal Male Elbow: KQ2VD

Applicable tubing O.D. (mm)	Connection thread R	Model	H (width across flats)	Note) øD1	øD2	L1	L2	L3	A*	M	P	Weight (g)
4	1/8	KQ2VD04-01S	14	10.4	13.4	22	18.5	41	37	16	13.4	23
	1/4	KQ2VD04-02S					21.5	44	38			29
	3/8	KQ2VD04-03S	17				23.5	46	40			42
6	1/8	KQ2VD06-01S	14	12.8	13.4	24.5	18.5	41	37	17	13.4	24
	1/4	KQ2VD06-02S					21.5	44	38			30
	3/8	KQ2VD06-03S	17				23.5	46	40			42
8	1/8	KQ2VD08-01S	19	15.2	17.6	28.5	21	48	44	18.5	15.9	53
	1/4	KQ2VD08-02S					24	51	45			51
	3/8	KQ2VD08-03S					25	52	45.5			60
	1/2	KQ2VD08-04S	21				28.5	55.5	47.5			82
10	1/4	KQ2VD10-02S	21	18.5	20.6	31.5	26.5	58	52	21	19.2	71
	3/8	KQ2VD10-03S					27.5	59	53			74
	1/2	KQ2VD10-04S					30.5	62	54			91
12	1/4	KQ2VD12-02S	26	20.9	25.2	34	28.5	64.5	58.5	22	21.6	118
	3/8	KQ2VD12-03S					29.5	65.5	59			113
	1/2	KQ2VD12-04S					32.5	68.5	60			125

* Reference dimensions after R thread installation.
Note) øD1: Max. diameter

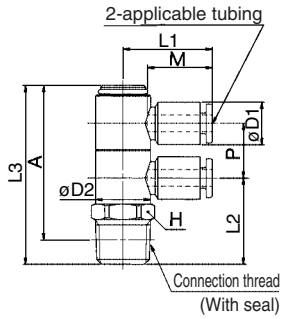

Triple Universal Male Elbow: KQ2VT

Applicable tubing O.D. (mm)	Connection thread R	Model	H (width across flats)	Note) øD1	øD2	L1	L2	L3	A*	M	P	Weight (g)
4	1/8	KQ2VT04-01S	14	10.4	13.4	22	18.5	54.5	50.5	16	13.4	29
	1/4	KQ2VT04-02S					21.5	57.5	51.5			34
	3/8	KQ2VT04-03S	17				23.5	59.5	53.5			48
6	1/8	KQ2VT06-01S	14	12.8	13.4	24.5	18.5	54.5	50.5	17	13.4	31
	1/4	KQ2VT06-02S					21.5	57.5	51.5			37
	3/8	KQ2VT06-03S	17				23.5	59.5	53.5			50
8	1/8	KQ2VT08-01S	19	15.2	17.6	28.5	21	64	60	18.5	15.9	71
	1/4	KQ2VT08-02S					24	67	61			66
	3/8	KQ2VT08-03S					25	68	61.5			75
	1/2	KQ2VT08-04S	21				28.5	71.5	63.5			96
10	1/4	KQ2VT10-02S	21	18.5	20.6	31.5	26.5	77.5	71.5	21	19.2	94
	3/8	KQ2VT10-03S					27.5	78.5	72			
	1/2	KQ2VT10-04S					30.5	81.5	73.5			111
12	1/4	KQ2VT12-02S	26	20.9	25.2	34	28.5	86	80	22	21.6	153
	3/8	KQ2VT12-03S					29.5	87	80.5			142
	1/2	KQ2VT12-04S					32.5	90	82			154

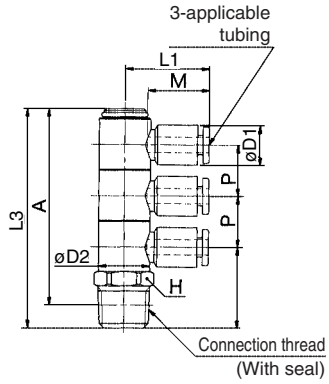

∗ Reference dimensions after R thread installation.
Note) øD1: Max. diameter

Branch Universal Male Elbow: KQ2Z

<M5>

<R>

Applicable tubing O.D. (mm)	Connection thread R	Model	H (width across flats)	Note) øD1	øD2	L1	L2	L3	A*	M	P	Effective area (mm²) Nylon	Effective area (mm²) Urethane	Weight (g)
4	M5 x 0.8	KQ2Z04-M5	8	10.4	9.8	19.5	11	18.5	15	16	10.4	3.4	3.4	8
	1/8	KQ2Z04-01S			13.4	21	14.5	26.5	22.5			4.7	4.7	16
6	1/8	KQ2Z06-01S	8	12.8	13.4	22	14.5	26.5	22.5	17	12.8	10.8	8.6	17
	1/4	KQ2Z06-02S	14		20.6	25.5	19.5	35.5	29.5					39
	3/8	KQ2Z06-03S					20.5	36.5	30					47
8	1/8	KQ2Z08-01S	12	15.2	17.6	26	15.5	28.5	24.5	18.5	15.2	20.5	14.2	27
	1/4	KQ2Z08-02S					18.5	31.5	25.5					33
	3/8	KQ2Z08-03S	14		20.6	27	20.5	36.5	30					49
10	1/4	KQ2Z10-02S	14	18.5	20.6	29	19.5	35.5	29.5	21	18.5	31.8	22.6	46
	3/8	KQ2Z10-03S					20.5	36.5	30					54
12	3/8	KQ2Z12-03S	17	20.9	25.2	32.5	22	39	32.5	22	20.9	44.6	35.3	71
	1/2	KQ2Z12-04S					25	42	34					88

∗ Reference dimensions after R thread installation.
Note) øD1: Max. diameter

<M5>

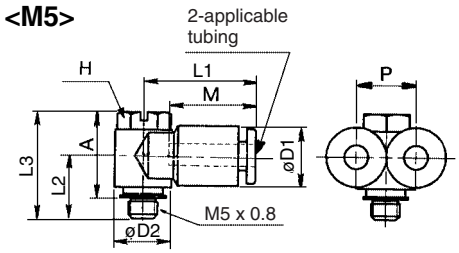

<R>

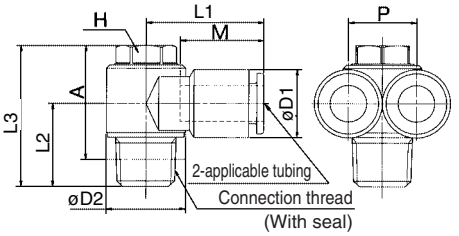

Branch Universal Female Elbow: KQ2ZF

<M5>

<R>

Applicable tubing O.D. (mm)	Connection thread R Rc	Model	H (width across flats)	Note) øD1	øD2	L1	L2	L3	A*	M	P	Weight (g)
4	M5 x 0.8	KQ2ZF04-M5	8	10.4	9.8	19.5	11	20	16.5	16	10.4	8
	1/8	KQ2ZF04-01S	14		13.4	21	15.5	29.5	25.5			21
6	1/8	KQ2ZF06-01S	14	12.8	13.4	22	15.5	29.5	25.5	17	12.8	21
	1/4	KQ2ZF06-02S	19		20.6	25.5	22	41	35			47
8	1/8	KQ2ZF08-01S	17	15.2	17.6	25.5	17	31	27	18.5	15.2	32
	1/4	KQ2ZF08-02S	19		20.6	27	22	41	35			49
10	1/4	KQ2ZF10-02S	19	18.5	20.6	29	22	41	35	21	18.5	54
	3/8	KQ2ZF10-03S	22		25.2	31.5	24.5	45.5	39			74
12	3/8	KQ2ZF12-03S	22	20.9	25.2	32.5	24.5	45.5	39	22	20.9	77
	1/2	KQ2ZF12-04S	24		27	33	25	50	42			101

∗ Reference dimensions after R thread installation.
Note) øD1: Max. diameter

<M5>

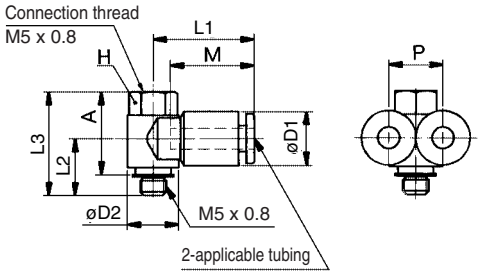

<R>

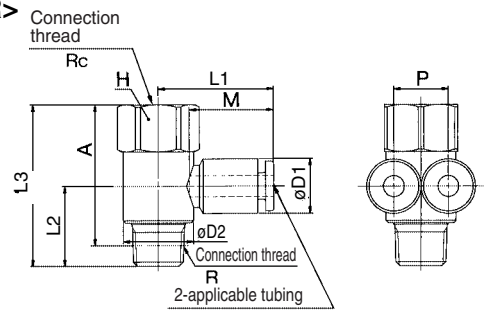

Double Branch Universal Male Elbow: KQ2ZD

Applicable tubing O.D. (mm)	Connection threads R	Model	H (width across flats)	Note) øD1	øD2	L1	L2	L3	A*	M	P1	P2	Weight (g)
4	1/8	KQ2ZD04-01S	14	10.4	13.4	21	18.5	41	37	16	13.4	10.4	34
	1/4	KQ2ZD04-02S					21.5	44	38				40
	3/8	KQ2ZD04-03S	17				23.5	46	40				53
6	1/8	KQ2ZD06-01S	14	12.8	13.4	22	18.5	41	37	17	13.4	12.8	38
	1/4	KQ2ZD06-02S					21.5	44	38				43
	3/8	KQ2ZD06-03S	17				23.5	46	40				57
8	1/8	KQ2ZD08-01S	19	15.2	17.6	26	21	48	44	18.5	15.9	15.2	76
	1/4	KQ2ZD08-02S					24	51	45				72
	3/8	KQ2ZD08-03S					25	52	45.5				81
	1/2	KQ2ZD08-04S	21				28.5	55.5	47.5				102
10	1/4	KQ2ZD10-02S	21	18.5	20.6	29	26.5	58	52	21	19.2	18.5	111
	3/8	KQ2ZD10-03S					27.5	59	53				
	1/2	KQ2ZD10-04S					30.5	62	54				128
12	1/4	KQ2ZD12-02S	26	20.9	25.2	32	28.5	64.5	58.5	22	21.6	20.9	178
	3/8	KQ2ZD12-03S					29.5	65.5	59				167
	1/2	KQ2ZD12-04S					32.5	68.5	60				179

* Reference dimensions after R thread installation.
Note) øD1: Max. diameter

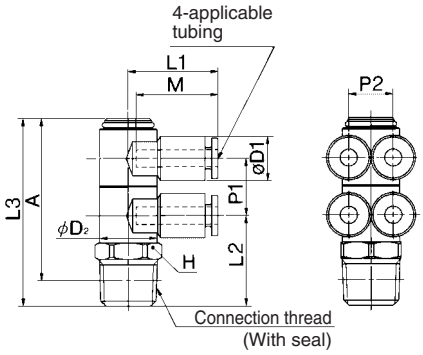

Triple Branch Universal Male Elbow: KQ2ZT

Applicable tubing O.D. (mm)	Connection threads R	Model	H (width across flats)	Note) øD1	øD2	L1	L2	L3	A*	M	P1	P2	Weight (g)
4	1/8	KQ2ZT04-01S	14	10.4	13.4	21	18.5	54.5	50.5	16	13.4	10.4	25
	1/4	KQ2ZT04-02S					21.5	57.5	51.5				31
	3/8	KQ2ZT04-03S	17				23.5	59.5	53.5				44
6	1/8	KQ2ZT06-01S	14	12.8	13.4	22	18.5	54.5	50.5	17	13.4	12.8	27
	1/4	KQ2ZT06-02S					21.5	57.5	51.5				33
	3/8	KQ2ZT06-03S	17				23.5	59.5	53.5				46
8	1/8	KQ2ZT08-01S	19	15.2	17.6	26	21	64	60	18.5	15.9	15.2	56
	1/4	KQ2ZT08-02S					24	67	61				54
	3/8	KQ2ZT08-03S					25	68	61.5				62
	1/2	KQ2ZT08-04S	21				28.5	71.5	63.5				85
10	1/4	KQ2ZT10-02S	21	18.5	20.6	29	26.5	77.5	71.5	21	19.2	18.5	83
	3/8	KQ2ZT10-03S					27.5	78.5	72				85
	1/2	KQ2ZT10-04S					30.5	81.5	73.5				102
12	1/4	KQ2ZT12-02S	26	20.9	25.2	32	28.5	86	80	22	21.6	20.9	134
	3/8	KQ2ZT12-03S					29.5	87	80.5				130
	1/2	KQ2ZT12-04S					32.5	90	82				141

* Reference dimensions after R thread installation.
Note) øD1: Max. diameter

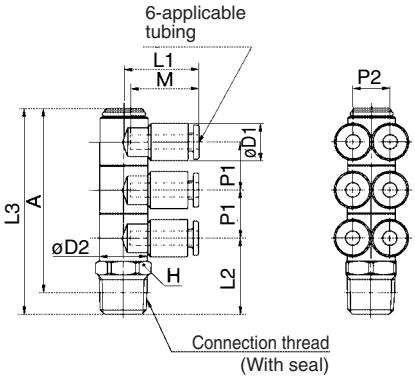

Union Elbow: KQ2L

Applicable tubing O.D. (mm)	Model	øD (1)	L	Q	M	Effective area (2) (mm²) Nylon	Effective area (2) (mm²) Urethane	Weight (g)
3.2	KQ2L23-00	9.6	17.5	4.3	15.5	3	2.5	3
4	KQ2L04-00	10.4	18	4.5	16	4.2	4.2	6
6	KQ2L06-00	12.8	20	5.3	17	11.4	9.0	6
8	KQ2L08-00	15.2	23	6	18.5	21.6	14.9	10
10	KQ2L10-00	18.5	26.5	6.8	21	35.2	25.0	17
12	KQ2L12-00	20.9	28.5	7.5	22	50.2	39.7	21
16	KQ2L16-00	26.5	34	10	25	100	(84)	29

Note 1) øD: Max. diameter
Note 2) ( ): Valves for soft nylon.

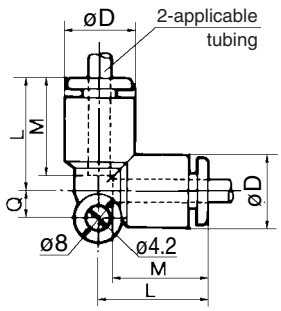

Branch Union Elbow: KQ2LU

Applicable tubing O.D. (mm)	Model	Note) øD	L1	L2	Q1	Q2	M	P	Effective area (mm²) Nylon	Effective area (mm²) Urethane	Weight (g)
4	**KQ2LU04-00**	10.4	18.5	24	18.5	10	16	10.4	6.0	4.1	6
6	**KQ2LU06-00**	12.8	21	27.5	20.5	12	17	12.8	13.9	11.0	8
8	**KQ2LU08-00**	15.2	24	32	24.5	14	18.5	15.2	26.3	18.2	15
10	**KQ2LU10-00**	18.5	27	36.5	28	16	21	18.5	40.8	29.0	25
12	**KQ2LU12-00**	20.9	29	40	30	18	22	20.9	57.2	45.2	32

Note) øD: Max. diameter

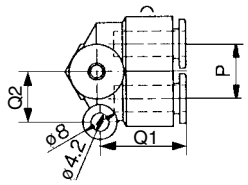

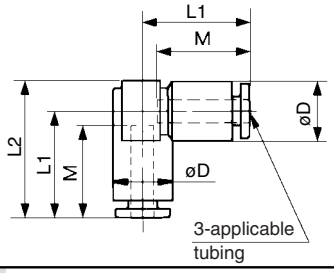

Plug-in Elbow: KQ2L

Applicable tubing O.D. (mm)	Applicable fitting size ød	Model	(1) øD1	øD2	L1	L2	A	M	Effective area(2) (mm²) Nylon	Effective area(2) (mm²) Urethane	Weight (g)
3.2	3.2	**KQ2L23-99**	9.6	7	17	24.5	14	15.5	3	2.5	2
4	4	**KQ2L04-99**	10.4	8	18	25	14.5	16	4.2	4.2	3
6	6	**KQ2L06-99**	12.8	10	20	27.5	17	17	11.4	9.0	3
8	8	**KQ2L08-99**	15.2	12	22.5	31.5	21	18.5	21.6	14.9	5
10	10	**KQ2L10-99**	18.5	14	25.5	35.5	23.5	21	35.2	25.0	9
12	12	**KQ2L12-99**	20.9	16	27	37.5	26	22	50.2	39.7	10
16	16	**KQ2L16-99**	26.5	20.9	34	53	41	25	100	(84)	42

Note 1) øD1: Max. diameter
Note 2) ( ): Values for soft nylon.

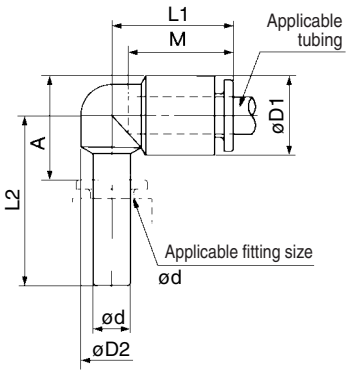

Extended Plug-in Elbow: KQ2W

Applicable tubing O.D. (mm)	Applicable fitting size ød	Model	Note) øD1	øD2	L1	L2	A	M	Effective area (mm²) Nylon	Effective area (mm²) Urethane	Weight (g)
3.2	3.2	**KQ2W23-99**	9.6	7	17.5	35	24.5	15.5	3	2.5	2
4	4	**KQ2W04-99**	10.4	8	18	37	26	16	4.2	4.2	3
6	6	**KQ2W06-99**	12.8	10	20	41.5	31	17	11.4	9.0	4
8	8	**KQ2W08-99**	15.2	10	22.5	48	37	18.5	21.6	14.9	6
10	10	**KQ2W10-99**	18.5	14	25.5	55	43.5	21	35.2	25.0	9
12	12	**KQ2W12-99**	20.9	16	27	59.5	48	22	50.2	39.7	13

Note) øD: Max. diameter

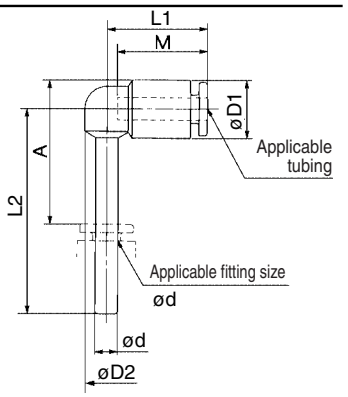

Reducer Elbow: KQ2L

Applicable tubing O.D. (mm)	Applicable fitting size ød	Model	Note) øD1	øD2	L1	L2	A	M	Effective area (mm²) Nylon	Effective area (mm²) Urethane	Weight (g)
3.2	4	**KQ2L23-04**	9.6	7	17	25	13.5	15.5	3	2.5	2
4	6	**KQ2L04-06**	10.4	8	18	26	14.5	16	4.2	4.2	3
	8	**KQ2L04-08**		10		35	22				11
6	8	**KQ2L06-08**	12.8	10	19.5	30.5	18	17	11.4	9.0	12
	10	**KQ2L06-10**			20	38.5	24				19
8	10	**KQ2L08-10**	15.2	12	22.5	33.5	20.5	18.5	21.6	14.9	20
	12	**KQ2L08-12**			23	40.5	26				27
10	12	**KQ2L10-12**	18.5	17	26.5	42	29.5	21	35.2	25.0	29
12	16	**KQ2L12-16**	20.9	17	28.5	49.5	34.5	22	50.2	39.7	53

Note) øD1: Max. diameter

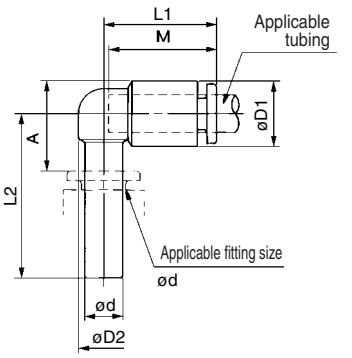

Extended Male Elbow: KQ2W

<M5>

<R>

Applicable tubing O.D. (mm)	Connection thread R	Model	H (width across flats)	øD1 (1)	øD2	L1	L2	A*	M	Effective area (2) (mm²) Nylon	Effective area (2) (mm²) Urethane	Weight (g)
3.2	M5 x 0.8	KQ2W23-M5	8	9.6	8	17.5	30	31	15.5	2.8	2.4	10
	1/8	KQ2W23-01S	10		10		37	38				19
	1/4	KQ2W23-02S	14				43	42				41
4	M5 x 0.8	KQ2W04-M5	8	10.4	8	18	30	32	16	3.0	3.0	11
	1/8	KQ2W04-01S	10		10		37.5	38.5		4.0	4.0	23
	1/4	KQ2W04-02S	14				43.5	42.5				38
6	M5 x 0.8	KQ2W06-M5	8	12.8	8	20	30.5	33.5	17	3	3	11
	1/8	KQ2W06-01S	10		10		40	42.5		10.9	8.6	26
	1/4	KQ2W06-02S	14				46	46.5				41
	3/8	KQ2W06-03S	17				48	48				67
8	1/8	KQ2W08-01S	12	15.2	12	23	43.5	47	18.5	20.5	14.2	30
	1/4	KQ2W08-02S	14				49.5	51				47
	3/8	KQ2W08-03S	17				51.5	52.5				74
10	1/4	KQ2W10-02S	17	18.5	17	26.5	56.5	59.5	21	33.5	23.8	66
	3/8	KQ2W10-03S					58.5	61				76
	1/2	KQ2W10-04S	22				65	66				145
12	1/4	KQ2W12-02S	17	20.9	17	28.5	57.5	62	22	47.7	37.7	68
	3/8	KQ2W12-03S					59.5	63.5				78
	1/2	KQ2W12-04S	22				66	68.5				147
16	3/8	KQ2W16-03S	22	26.5	20.9	34	69.5	76	25	71	(71)	101
	1/2	KQ2W16-04S					75	80		100	(84)	105

* Reference dimensions after R thread installation.
Note 1) øD: Max. diameter
Note 2) ( ): Values for soft nylon

<M5>

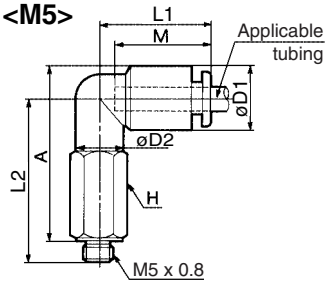

<R>

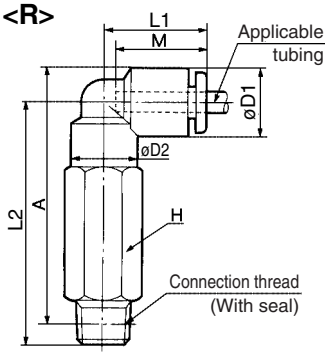

Male Branch Tee: KQ2T

<M5>

<M6>

<R>

Applicable tubing O.D. (mm)	Connection thread R	Model	H (width across flats)	øD1 (1)	øD2	L1	L2	A*	M	Effective area (2) (mm²) Nylon	Effective area (2) (mm²) Urethane	Weight (g)
3.2	M5 x 0.8	KQ2T23-M5	7	8.4	—	15.3	13.2	14.3	12.7	3.2	2.7	3.2
	1/8	KQ2T23-01S	10	9.6	10	17.5	21.5	22.5	15.5	3.4	2.9	10
	1/4	KQ2T23-02S	14				25.5	24.5				20
4	M5 x 0.8	KQ2T04-M5	7	9.3	—	15.6	13.7	15.3	12.7	4.5	4.5	3.5
	M6 x 1.0	KQ2T04-M6	8				14.7					4.4
	1/8	KQ2T04-01S	10	10.4	10	18	22	23	16	6.0	4.1	13
	1/4	KQ2T04-02S	14				26	25				19
6	M5 x 0.8	KQ2T06-M5	7	11.6	—	16.1	14.7	17.4	13.5	4.5	4.5	4.4
	M6 x 1.0	KQ2T06-M6	8				15.7					5.3
	1/8	KQ2T06-01S	10	12.8	10	20	23	25.5	17	13.9	11.0	12
	1/4	KQ2T06-02S	14				27	27.5				20
	3/8	KQ2T06-03S	17				29	29				34
8	1/8	KQ2T08-01S	12	15.2	12	23	24.5	28	18.5	26.3	18.2	14
	1/4	KQ2T08-02S	14				28.5	30				22
	3/8	KQ2T08-03S	17				30.5	31.5				36
10	1/8	KQ2T10-01S	17	18.5	17	26.5	27	32	21	40.8	29.0	31
	1/4	KQ2T10-02S					30	33				29
	3/8	KQ2T10-03S					32	34.5				39
	1/2	KQ2T10-04S	22				36	37				66
12	1/4	KQ2T12-02S	17	20.9	17	28.5	31	35.5	22	57.2	45.2	31
	3/8	KQ2T12-03S					33	37				41
	1/2	KQ2T12-04S	22				37	39.5				68
16	3/8	KQ2T16-03S	22	26.5	20.9	34	38	44.5	25	71	(71)	112
	1/2	KQ2T16-04S					40.5	46		100	(100)	116

* Reference dimensions after R thread installation.
Note 1) øD1: Max. diameter
Note 2) ( ): Values for soft nylon.

<M5, M6>

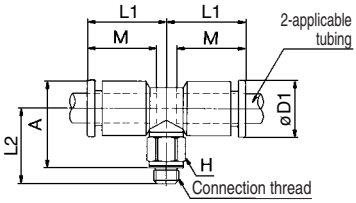

<R>

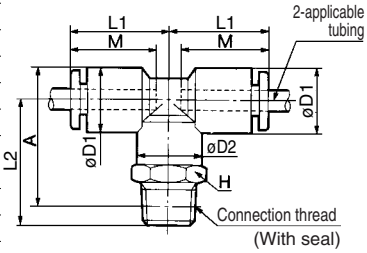

Union Tee: KQ2T

Applicable tubing O.D. (mm)	Model	øD[1]	L	Q	M	Effective area[2] (mm²) Nylon	Effective area[2] (mm²) Urethane	Weight (g)
3.2	**KQ2T23-00**	9.6	17.5	4.3	15.5	3.4	2.9	5
4	**KQ2T04-00**	10.4	18	4.5	16	6.4	4.4	7
6	**KQ2T06-00**	12.8	20	5.3	17	13.4	10.6	10
8	**KQ2T08-00**	15.2	23	6	18.5	25.6	17.7	15
10	**KQ2T10-00**	18.5	26.5	6.8	21	40	28.4	25
12	**KQ2T12-00**	20.9	28.5	7.5	22	57.4	45.4	29
16	**KQ2T16-00**	26.5	34	10	25	100	(84)	40

Note 1) øD: Max. diameter
Note 2) ( ): Valves for soft nylon.

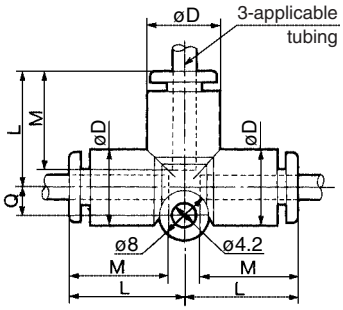

Different Diameter Tee: KQ2T

Applicable tubing O.D. (mm) ⓐ	Applicable tubing O.D. (mm) ⓑ	Model	øD1[1]	øD2	L1	L2	Q	M1	M2	Effective area[2] (mm²) Nylon	Effective area[2] (mm²) Urethane	Weight (g)
3.2	4	**KQ2T23-04**	10.4	9.6	18	17.5	4.3	16	15.5	3.8	3.5	5
4	6	**KQ2T04-06**	12.8	10.4	19.5	18	4.5	17	16	7.1	6.5	5
6	8	**KQ2T06-08**	15.2	12.8	22.5	20	5.3	18.5	17	16.4	16.4	8
8	10	**KQ2T08-10**	18.5	15.2	26.5	23	6	21	18.5	36	27.2	14
10	12	**KQ2T10-12**	20.9	18.5	28.5	26.5	6.8	22	21	56	44.5	21
12	16	**KQ2T12-16**	26.5	26.5	34	39	10	25	22	108.5	(92.2)	88

Note 1) øD1: Max. diameter
Note 2) ( ): Values for soft nylon.

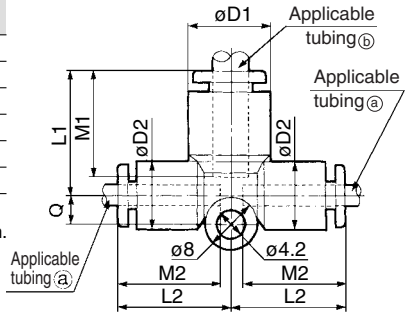

Different Diameter Tee: KQ2T

Applicable tubing O.D. (mm) ⓐ	Applicable tubing O.D. (mm) ⓑ	Model	øD Note)	L	Q	M1	M2	Effective area (mm²) Nylon	Effective area (mm²) Urethane	Weight (g)
6	4	**KQ2T06-04**	12.8	20	5.3	17	16	6.4	4.4	10
8	6	**KQ2T08-06**	15.2	23	6	18.5	17	13.4	10.6	15
10	8	**KQ2T10-08**	18.5	26.5	7.5	21	18.5	25.6	17.7	25
12	10	**KQ2T12-10**	20.9	28.5	7.5	22	21	40	28.4	29

Note) øD: Max. diameter

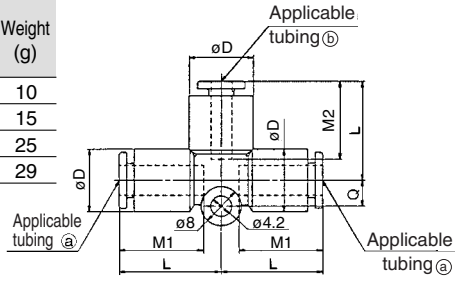

Cross: KQ2TW

Applicable tubing O.D. (mm)	Model	øD Note)	L	Q	M	Effective area (mm²) Nylon	Effective area (mm²) Urethane	Weight (g)
4	**KQ2TW04-00**	10.4	18	8.7	16	6.4	4.4	9
6	**KQ2TW06-00**	12.8	20	9.9	17	13.4	10.6	13
8	**KQ2TW08-00**	15.2	23	11.1	18.5	25.6	17.7	20
10	**KQ2TW10-00**	18.5	26.5	12.8	21	40	28.4	33
12	**KQ2TW12-00**	20.9	28.5	13.9	22	57.4	45.4	39

Note) øD: Max. diameter

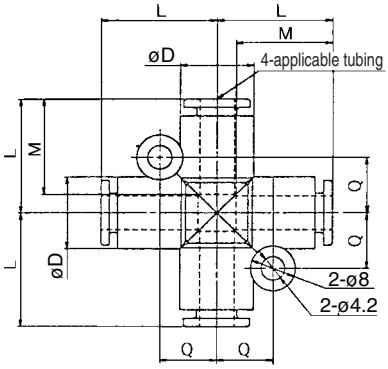

Different Diameter Cross: KQ2TX

Applicable tubing O.D. (mm) ⓐ	Applicable tubing O.D. (mm) ⓑ	Model	øD Note)	L	Q	M1	M2	Effective area (mm²) Nylon	Effective area (mm²) Urethane	Weight (g)
6	8	**KQ2TX06-08**	15.2	23	11.1	18.5	17	13.4	10.6	13
8	10	**KQ2TX08-10**	18.5	26.5	12.8	21	18.5	25.6	17.7	27
10	12	**KQ2TX10-12**	20.9	28.5	13.9	22	21	40	28.4	36

Note) øD: Max. diameter

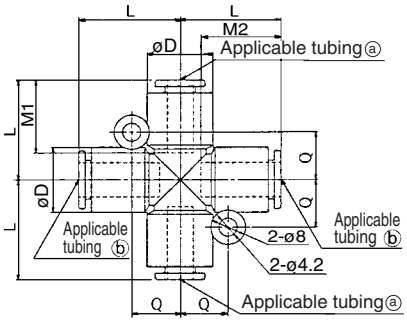

Different Diameter Cross: KQ2TY

Applicable tubing O.D. (mm) ⓐ	ⓑ	Model	Note) øD	L	Q	M1	M2	Effective area (mm²) Nylon	Urethane	Weight (g)
6	8	**KQ2TY06-08**	15.2	23	11.1	17	18.5	13.4	10.6	15
8	10	**KQ2TY08-10**	18.5	26.5	12.8	18.5	21	25.6	17.7	23
10	12	**KQ2TY10-12**	20.9	28.5	13.9	21	22	40	28.4	35

Note) øD: max. diameter

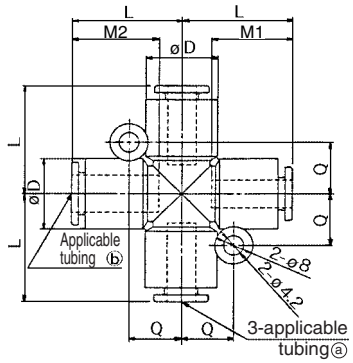

Male Run Tee: KQ2Y

<M5>

<M6>

<R>

Applicable tubing O.D. (mm)	Connection thread R	Model	H (width across flats)	(1) øD1	øD2	L1	L2	L3	A*	M	Effective area (2) (mm²) Nylon	Urethane	Weight (g)
3.2	M5 x 0.8	**KQ2Y23-M5**	7	8.4	—	15.4	13.2	14.8	24.9	12.7	3.2	2.7	3.2
	1/8	**KQ2Y23-01S**	10	9.6	10	17.5	21.5	—	35	15.5	3.4	2.9	10
	1/4	**KQ2Y23-02S**	14				25.5		37				20
4	M5 x 0.8	**KQ2Y04-M5**	7	9.3	—	15.6	13.7	14.8	25.4	12.7	4.5	4.5	3.5
	M6 x 1.0	**KQ2Y04-M6**	8				14.7						6
	1/8	**KQ2Y04-01S**	10	10.4	10	18	22	—	36	16	6.4	4.4	13
	1/4	**KQ2Y04-02S**	14				26		38				19
6	M5 x 0.8	**KQ2Y06-M5**	7	11.6	—	17.1	14.7	17.1	28.7	13.5	4.5	4.5	4.5
	M6 x 1.0	**KQ2Y06-M6**	8				15.7						7
	1/8	**KQ2Y06-01S**	10	12.8	10	20	23	—	39	17	13.4	10.6	12
	1/4	**KQ2Y06-02S**	14				27		41				20
	3/8	**KQ2Y06-03S**	17				29		42.5				34
8	1/8	**KQ2Y08-01S**	12	15.2	12	23	24.5	—	43.5	18.5	25.6	17.7	14
	1/4	**KQ2Y08-02S**	14				28.5		45.5				22
	3/8	**KQ2Y08-03S**	17				30.5		47				36
10	1/8	**KQ2Y10-01S**	17	18.5	17	26.5	27	—	49.5	21	40.0	28.4	31
	1/4	**KQ2Y10-02S**					30		50.5				29
	3/8	**KQ2Y10-03S**					32		52				39
	1/2	**KQ2Y10-04S**	22				36		54.5				66
12	1/4	**KQ2Y12-02S**	17	20.9	17	28.5	31	—	53.5	22	57.4	45.4	31
	3/8	**KQ2Y12-03S**					33		55				41
	1/2	**KQ2Y12-04S**	22				37		57.5				68
16	3/8	**KQ2Y16-03S**	22	26.5	20.9	34	38	—	65.5	25	81	(81)	112
	1/2	**KQ2Y16-04S**					41		67		113	(113)	116

* Reference dimensions after R thread installation.
Note 1) øD: Max. diameter
Note 2) ( ): Values for soft nylon

<M5, M6>

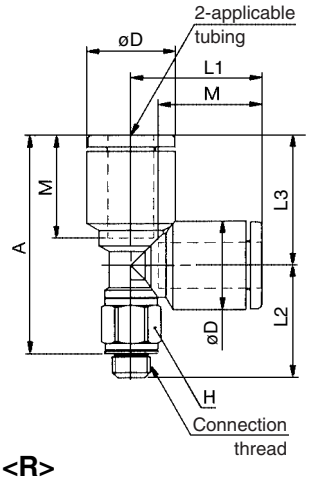

<R>

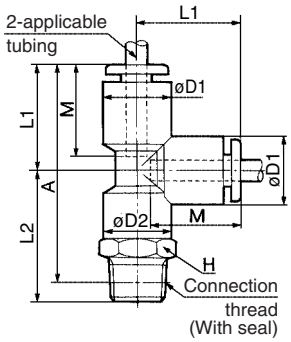

Male Delta Union: KQ2D

<M5, M6>

<R>

Applicable tubing O.D. (mm)	Connection thread R	Model	H (width across flats)	Note) øD	L1	L2	A*	M	Q	Effective area (mm²) Nylon	Effective area (mm²) Urethane	Weight (g)
4	M5 x 0.8	KQ2D04-M5	11	10.4	18.5	24	25.5	16	8.7	2.2	2.2	10
	M6 x 1.0	KQ2D04-M6				24.5				4.3	4.3	
	1/8	KQ2D04-01S				26.5	27.5			6.0	6.0	12
	1/4	KQ2D04-02S	14			30.5	29.5					21
6	M5 x 0.8	KQ2D06-M5	13	12.8	20.5	26	28.5	17	9.9	4.3	4.3	12
	M6 x 1.0	KQ2D06-M6				26.5						
	1/8	KQ2D06-01S				29	31.5			13.9	11.0	14
	1/4	KQ2D06-02S	14			32.5	33					21
	3/8	KQ2D06-03S	17			34.5	34.5					34
8	1/8	KQ2D08-01S	17	15.2	23.5	33.5	37	18.5	11.1	26.3	18.2	26
	1/4	KQ2D08-02S				36.5	38					
	3/8	KQ2D08-03S				37.5	38.5					35
10	1/4	KQ2D10-02S	19	18.5	26.5	39.5	43	21	12.8	40.8	29.0	39
	3/8	KQ2D10-03S				40.5	43.5					40
	1/2	KQ2D10-04S	22			44	45					62
12	1/4	KQ2D12-02S	22	20.9	28.5	42	46.5	22	13.9	57.2	45.2	55
	3/8	KQ2D12-03S				43	47					56
	1/2	KQ2D12-04S				46	48.5					63

* Reference dimensions after R thread installation.
Note) øD: Max. diameter

<M5, M6>

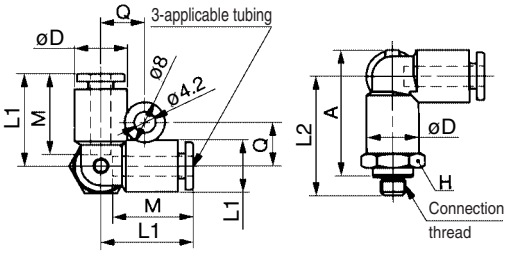

<R>

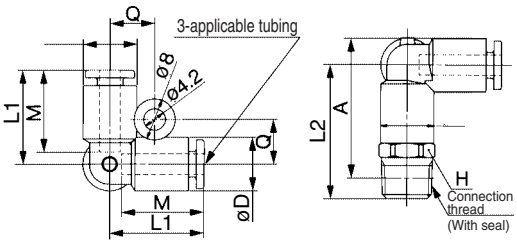

Delta Union: KQ2D

Applicable tubing O.D. (mm)	Model	Note) øD	L	Q	M	Effective area (mm²) Nylon	Effective area (mm²) Urethane	Weight (g)
4	KQ2D04-00	10.4	18.5	8.7	16	6.0	4.1	5
6	KQ2D06-00	12.8	20.5	9.9	17	13.9	11.0	7
8	KQ2D08-00	15.2	23.5	11.1	18.5	26.3	18.2	11
10	KQ2D10-00	18.5	26.5	12.8	21	40.8	29.0	19
12	KQ2D12-00	20.9	28.5	13.9	22	57.2	45.2	24

Note) øD: Max. diameter

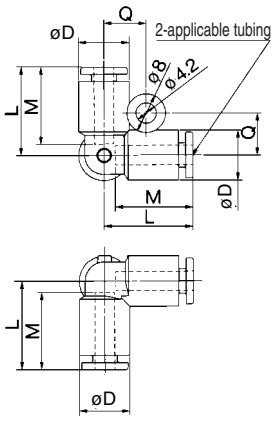

Branch "Y": KQ2U

<M5, M6>

<R>

Applicable tubing O.D. (mm)	Connection thread R	Model	H (width across flats)	øD (1)	L	P	A*	M	Effective area (2) (mm²) Nylon	Effective area (2) (mm²) Urethane	Weight (g)
3.2	M5 x 0.8	KQ2U23-M5	10	9.6	38	9.6	34.5	15.5	2.2	2.2	9
	1/8	KQ2U23-01S	11		41		37		3.4	2.9	14
	1/4	KQ2U23-02S	14		44		38				
4	M5 x 0.8	KQ2U04-M5	11	10.4	39.5	10.4	36	16	2.2	2.2	4
	M6 x 1.0	KQ2U04-M6			40						10
	1/8	KQ2U04-01S			42		38		4.2	4.2	11
	1/4	KQ2U04-02S	14		46		40				20
6	M5 x 0.8	KQ2U06-M5	13	12.8	42.5	12.8	39	17	2.2	2.2	12
	M6 x 1.0	KQ2U06-M6			43						
	1/8	KQ2U06-01S			45.5		41.5		13.4	10.6	11
	1/4	KQ2U06-02S	14		49		43				21
	3/8	KQ2U06-03S	17		51		44.5				34
8	1/8	KQ2U08-01S	17	15.2	52.5	15.2	48.5	18.5	25.6	17.7	15
	1/4	KQ2U08-02S			55.5		49.5				23
	3/8	KQ2U08-03S			56.5		50				35
10	1/4	KQ2U10-02S	19	18.5	61	18.5	55	21	40	28.4	30
	3/8	KQ2U10-03S			62		55.5				40
	1/2	KQ2U10-04S	22		65		57				65
12	1/4	KQ2U12-02S	22	20.9	64.5	20.9	58.5	22	57.4	45.4	32
	3/8	KQ2U12-03S			65.5		59				40
	1/2	KQ2U12-04S			68.5		60.5				65
16	3/8	KQ2U16-03S	27	26.5	76	26.5	69.5	25	81	(81)	106
	1/2	KQ2U16-04S			79		71		113	(96)	111

* Reference dimensions after R thread installation.
Note 1) øD1: Max. diameter
Note 2) ( ): Values for soft nylon

<M5, M6>

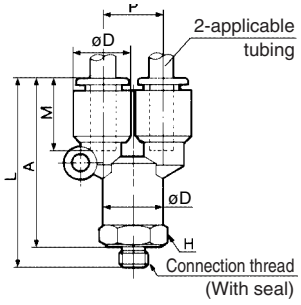

<R>

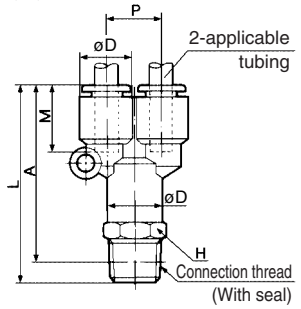

Delta Branch: KQ2UD

Applicable tubing O.D. (mm)	Connection thread R	Model	H (width across flats)	Note) øD1	øD2	L	I	A*	Q	M	P	Effective area (mm²) Nylon	Effective area (mm²) Urethane	Weight (g)
4	1/8	KQ2UD04-01S	13	10.4	12.8	43.5	21	39.5	9.7	16	10.4	4.2	4.2	17
	1/4	KQ2UD04-02S	14			47		41						25
6	1/8	KQ2UD06-01S	17	12.8	15.2	50.5	26	46.5	11.7	17	12.8	13.4	10.6	29
	1/4	KQ2UD06-02S				53.5		47.5						

∗ Reference dimensions after R thread installation.
Note) øD1: Max. diameter

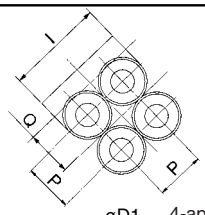

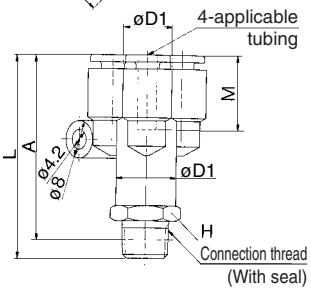

Union "Y": KQ2U

Applicable tubing O.D. (mm)	Model	øD (1)	L1	L2	P	Q	M	Effective area (2) (mm²) Nylon	Effective area (2) (mm²) Urethane	Weight (g)
3.2	KQ2U23-00	9.6	33	17.5	9.6	9	15.5	3.4	2.9	5
4	KQ2U04-00	10.4	34	18	10.4	9.7	16	4.2	4.2	7
6	KQ2U06-00	12.8	37	20	12.8	11.7	17	13.4	10.6	9
8	KQ2U08-00	15.2	42.5	24.5	15.2	13.7	18.5	25.6	17.7	11
10	KQ2U10-00	18.5	48	27.5	18.5	16.1	21	40	28.4	16
12	KQ2U12-00	20.9	51	30	20.9	18.1	22	57.4	45.4	23
16	KQ2U16-00	26.5	61.5	36.5	26.5	23	25	113	(96)	54

Note 1) øD: Max. diameter
Note 2) ( ): Values for soft nylon.

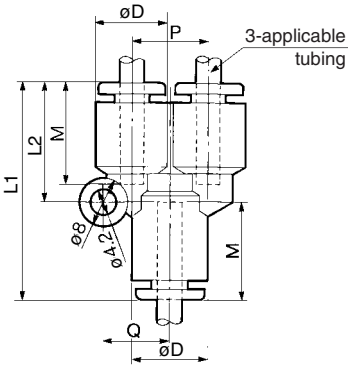

Different Diameter Union "Y": KQ2U

Applicable tubing O.D. (mm) ⓐ	Applicable tubing O.D. (mm) ⓑ	Model	Note) øD1	Note) øD2	L1	L2	P	Q	M1	M2	Effective area (mm²) Nylon	Effective area (mm²) Urethane	Weight (g)
3.2	4	KQ2U23-04	9.6	10.4	33.5	17.5	9.6	9	15.5	16	3.2	2.7	5
4	6	KQ2U04-06	10.4	12.8	35	18	10.4	9.7	16	17	4.2	4.2	6
6	8	KQ2U06-08	12.8	15.2	39.5	20	12.8	11.7	17	18.5	13.4	10.6	11
8	10	KQ2U08-10	15.2	18.5	45	24.5	15.2	13.7	18.5	21	25.6	17.7	18
10	12	KQ2U10-12	18.5	20.9	49	27.5	18.5	16.1	21	22	40	28.4	27
12	16	KQ2U12-16	26.5	26.5	66.5	41.5	26.5	23	22	25	57.4	45.4	100

Note) øD1, øD2: Max. diameter

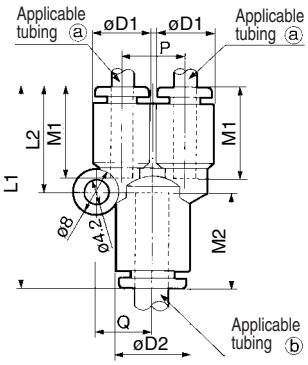

Different Diameter Double Union "Y": KQ2UD

Applicable tubing O.D. (mm) ⓐ	Applicable tubing O.D. (mm) ⓑ	Model	Note) øD1	Note) øD2	L1	L2	P	I	Q	M1	M2	Effective area (mm²) Nylon	Effective area (mm²) Urethane	Weight (g)
4	6	KQ2UD04-06	10.4	12.8	35.5	18.2	10.4	21	9.7	16	17	4.2	4.2	10
6	8	KQ2UD06-08	12.8	15.2	40.5	20.3	12.8	26	11.7	17	18.5	13.4	10.6	17

Note) øD1, øD2: Max. diameter

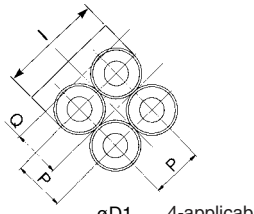

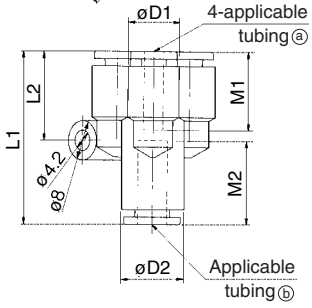

Plug-in "Y": KQ2U

Applicable tubing O.D. (mm)	Application fitting ød	Model	øD (1)	L1	L2	P	Q	A	M	Effective area (2) (mm²) Nylon	Effective area (2) (mm²) Urethane	Weight (g)
3.2	3.2	**KQ2U23-99**	9.6	50	17.5	9.6	9	35	15.5	3.4	2.9	6
4	4	**KQ2U04-99**	10.4	51.5	18	10.4	9.7	35.5	16	4.2	4.2	12
6	6	**KQ2U06-99**	12.8	55.5	20	12.8	11.7	38.5	17	13.4	10.6	18
8	8	**KQ2U08-99**	15.2	64.5	24.5	15.2	13.7	46	18.5	25.6	17.7	21
10	10	**KQ2U10-99**	18.5	71.5	27.5	18.5	16.1	50.5	21	40	28.4	26
12	12	**KQ2U12-99**	20.9	75.5	30	20.9	18.1	53.5	22	57.4	45.4	32
16	16	**KQ2U16-99**	26.5	90	36.5	26.5	23	65	25	113	(96)	78

Note 1) øD: Max. diameter
Note 2) ( ): Values for soft nylon.

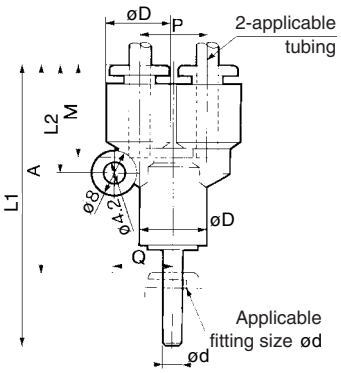

Double Plug-in "Y": KQ2XD

Applicable tubing O.D. (mm)	Application fitting Fitting size ød	Model	Note) øD1	øD2	L1	L2	I	Q	A	P	M	Effective area (mm²) Nylon	Effective area (mm²) Urethane	Weight (g)
4	6	**KQ2XD04-06**	10.4	12.8	54	18.2	21	9.7	37	10.4	16	4.2	4.2	10
6	8	**KQ2XD06-08**	12.8	15.2	62.5	20.3	26	11.7	44	12.8	17	13.4	10.6	23

Note) øD1: Max. diameter

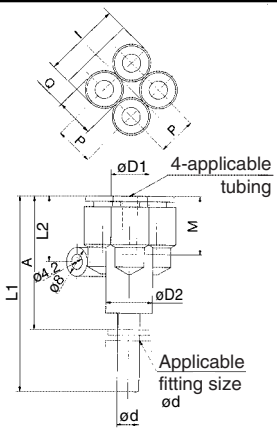

Different Diameter Plug-in "Y": KQ2X

Applicable tubing O.D. (mm)	Application fitting Fitting size ød	Model	Note) øD1	øD2	L1	L2	A	P	Q	M	Effective area (mm²) Nylon	Effective area (mm²) Urethane	Weight (g)
4	6	**KQ2X04-06**	10.4	12.8	53.5	18.5	36.5	10.4	9.7	16	4.2	4.2	7
6	8	**KQ2X06-08**	12.8	15.2	61.5	20.5	43	12.8	11.7	17	13.4	10.6	18
8	10	**KQ2X08-10**	15.2	18.5	68.5	24.5	47.5	15.2	13.7	18.5	25.6	17.7	28
10	12	**KQ2X10-12**	18.5	20.9	73.5	27.5	51.5	18.5	16.1	21	40	28.4	42

Note) øD1: Max. diameter

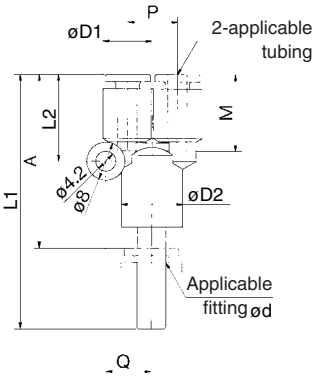

Plug-in Reducer: KQ2R

Applicable tubing O.D. (mm)	Applicable fitting size ød	Model	øD (1)	L	A	M	Effective area (2) (mm²) Nylon	Effective area (2) (mm²) Urethane	Weight (g)
3.2	4	**KQ2R23-04**	9.6	33.5	18.5	15.5	3.4	2.9	2
4	6	**KQ2R04-06**	10.4	34.5	17.5	16	5.6	4	1.8
	8	**KQ2R04-08**		36.5	18				2.0
	10	**KQ2R04-10**	12.8	39.5	18.5				3.3
6	4	**KQ2R06-04**	12.8	37	21	17	4	4	2.5
	8	**KQ2R06-08**	12.8	37	18.5		13.1	10.4	2.5
	10	**KQ2R06-10**		39.5	18.5				3
	12	**KQ2R06-12**	15.2	42	20				4.7
8	10	**KQ2R08-10**	15.2	41	20	18.5	26.1	18.0	4.0
	12	**KQ2R08-12**		42					4.6
10	12	**KQ2R10-12**	18.5	44.5	23	21	41.5	32.8	33
	16	**KQ2R10-16**	20.9	50.5	25.5			(29.5)	42
12	16	**KQ2R12-16**	20.9	50.5	25.5	22	58.3	(46.1)	37

Note 1) øD: Max. diameter
Note 2) ( ): Values for soft nylon.

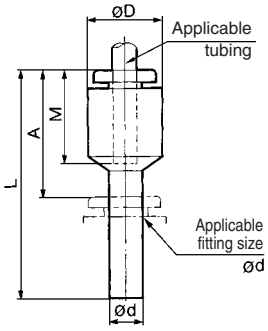

Bulkhead Union: KQ2E

Applicable tubing O.D. (mm)	Model	T (M)	H (width across flats)	L	Mounting hole	M	Effective area Note) (mm²) Nylon	Effective area Note) (mm²) Urethane	Weight (g)
3.2	**KQ2E23-00**	M12 x 1	14	31.5	13	15.5	3.4	2.9	26
4	**KQ2E04-00**	M12 x 1	14	32.5	13	16	5.6	4	26
6	**KQ2E06-00**	M14 x 1	17	34.5	15	17	13.1	10.4	33
8	**KQ2E08-00**	M16 x 1	19	38	17	18.5	26.1	18.0	52
10	**KQ2E10-00**	M20 x 1	24	42.5	21	21	41.5	29.5	70
12	**KQ2E12-00**	M22 x 1	27	44	23	22	58.3	46.1	90
16	**KQ2E16-00**	M28 x 1.5	32	51	29	25	113	(96)	115

Note) ( ): Values for soft nylon.

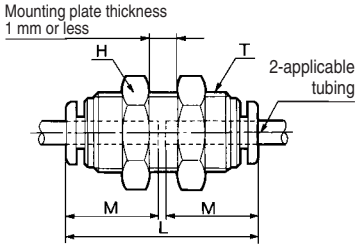

Bulkhead Male Elbow: KQ2LE

Applicable tubing O.D. (mm)	Model	T	H1 (Hex. across flats)	H2 (Hex. across flats)	B	E	Note) øD	Mounting hole	M	Effective area (mm²) Nylon	Effective area (mm²) Urethane	Weight (g)
4	**KQ2LE04-00**	M12 x 1	14	14	18.5	31	10.4	13	16	4.2	4.2	18
6	**KQ2LE06-00**	M14 x 1	17	17	20.5	34	12.8	15	17	11.4	9.0	25
8	**KQ2LE08-00**	M16 x 1	17	19	23.5	38.5	15.2	17	18.5	21.6	14.9	33
10	**KQ2LE10-00**	M20 x 1	22	24	26.5	43.5	18.5	21	21	35.2	25.0	63
12	**KQ2LE12-00**	M22 x 1	24	27	28.5	45.5	20.9	23	22	50.2	39.7	77

Note) øD: Max. diameter

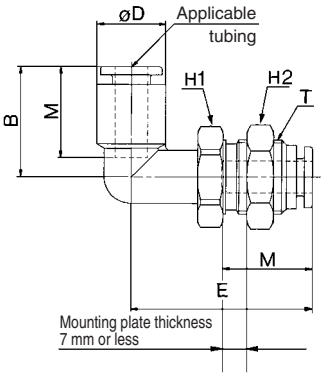

Bulkhead Connector: KQ2E

Applicable tubing O.D. (mm)	Connection thread Rc	Model	T (M)	H1 (Hex. across flats)	H2 (Hex. across flats)	L1	L2	Mounting hole	M	Effective area Note) (mm²) Nylon	Effective area Note) (mm²) Urethane	Weight (g)
3.2	1/4	**KQ2E23-02**	M12 x 1	17	14	31.5	15	13	15.5	3.4	2.9	13
4	1/8	**KQ2E04-01**	M12 x 1	14	14	27.5	11	13	16	5.6	4	16
	1/4	**KQ2E04-02**		17		31	15					35
6	1/8	**KQ2E06-01**	M14 x 1	17	17	28	11	15	17	13.1	10.4	25
	1/4	**KQ2E06-02**				31.5	15					40
	3/8	**KQ2E06-03**		19		33.5	17					29
8	1/8	**KQ2E08-01**	M16 x 1	17	19	27.5	7.5	17	18.5	26.1	18.0	28
	1/4	**KQ2E08-02**				33	13					27
	3/8	**KQ2E08-03**		19		35	15					48
10	1/4	**KQ2E10-02**	M20 x 1	22	24	34.5	12.5	21	21	41.5	29.5	53
	3/8	**KQ2E10-03**		22		36.5	15					67
12	3/8	**KQ2E12-03**	M22 x 1	24	27	37	14	23	22	58.3	46.1	92
	1/2	**KQ2E12-04**				41	18					59
16	3/8	**KQ2E16-03**	M28 x 1.5	30	32	40	14	29	25	96	(96)	127
	1/2	**KQ2E16-04**				44	18			113		132

Note) ( ): Values for soft nylon.

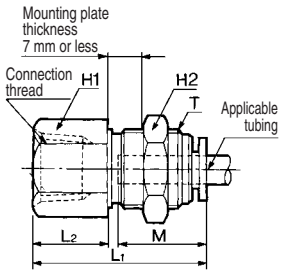

Adaptor: KQ2N

Applicable fitting size ød	Connection thread R	Model	H (width across flats)	L	A*	M	ød	Weight (g)
4	M5 x 0.8	**KQ2N04-M5**	7	32	29	13	2.5	2
	1/8	**KQ2N04-01S**	10	34	30	14		6
6	M5 x 0.8	**KQ2N06-M5**	7	33	30	13	2.5	2
	1/8	**KQ2N06-01S**	10	35	31	14	4.5	5
	1/4	**KQ2N06-02S**	14	37.5	31.5	14.5		14
8	1/4	**KQ2N08-02S**	14	39	33	14.5	6	17
	3/8	**KQ2N08-03S**	17	41	34.5	16		30
10	3/8	**KQ2N10-03S**	17	46	39.5	18.5	7.5	31

∗ Reference dimensions after R thread is screwed in.

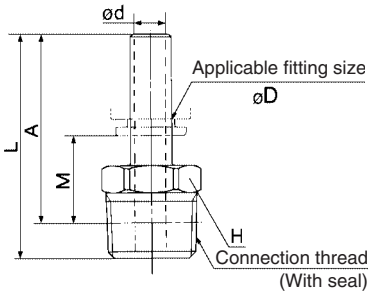

Nipple: KQ2N

Applicable fitting øD	Model	L	M	ød	Weight (g)
4	**KQ2N04-99**	37	16	2.5	1
6	**KQ2N06-99**	39	17	4	2
8	**KQ2N08-99**	43	18.5	6	2
10	**KQ2N10-99**	49	21	7.5	4
12	**KQ2N12-99**	52	22	9	20.6
16	**KQ2N16-99**	57	25	13	31

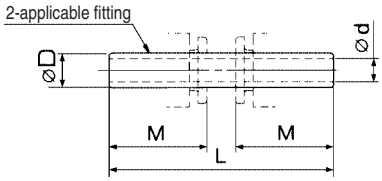

Reducer Nipple: KQ2N

Applicable fitting ⓐ	Applicable fitting ⓑ	Model	L	M1	M2	ød	Weight (g)
4	6	**KQ2N04-06**	38	17	16	2.5	2
6	8	**KQ2N06-08**	42	18.5	17	4	2
8	10	**KQ2N08-10**	47	21	18.5	6	13.2
10	12	**KQ2N10-12**	51	22	21	8	18.2
12	16	**KQ2N12-16**	55	25	22	9	29

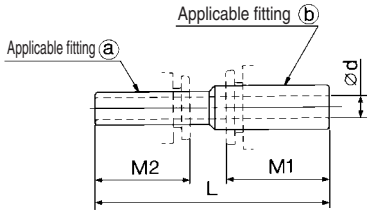

Tube Cap: KQ2C

Applicable tubing O.D. (mm)	Model	Note) øD	L	M	Weight (g)
4	**KQ2C04-00**	10.4	17	16	3
6	**KQ2C06-00**	12.8	18.5	17	3
8	**KQ2C08-00**	15.2	20.5	18.5	4
10	**KQ2C10-00**	18.5	23	21	6
12	**KQ2C12-00**	20.9	24	22	8
16	**KQ2C16-00**	26.5	28	25	13

Note) øD: Max. diameter

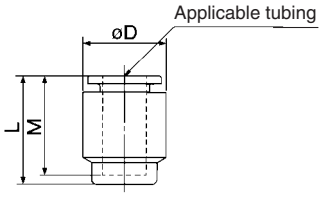

Color Cap: KQ2C

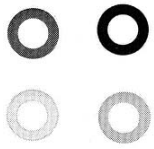

Applicable tubing O.D. (mm)	Model	øD1	øD2	L	Weight (g)	Application
4	**KQ2C-04□**	10.1	5.2	2.9	0.1	
4	**KQ2C-04A-□**	8.5	5	2.2	0.1	KQH, KQ2H04-M5, M6 KQS, KQ2S04-M5, M6
4	**KQ2C-04B-□**	9.7	5	2.2	0.1	KQL, KQ2L04-M5, M6 KQT, KQ2T04-M5, M6 KQY, KQ2Y04-M5, M6
6	**KQ2C-06□**	12.1	7.2	2.9	0.1	
6	**KQ2C-06A-□**	10.5	7	2.2	0.1	KQH, KQ2H06-M5, M6 KQS, KQ2S06-M5, M6
6	**KQ2C-06B-□**	12.0	7	2.2	0.1	KQL, KQ2L06-M5, M6 KQT, KQ2T06-M5, M6 KQY, KQ2Y06-M5, M6
8	**KQ2C-08□**	14.1	9.2	2.9	0.1	
10	**KQ2C-10□**	17.1	11.2		0.2	
12	**KQ2C-12□**	19.1	13.2		0.2	
16	**KQ2C-16□**	26.3	17.2	3.9	0.3	

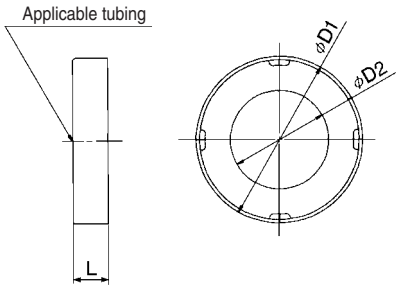

□ → B (Black), R (Red), YR (Orange), BR (Brown), Y (Yellow), G (Green), CB (Sky blue), GR (Gray), W (White), BU (Blue)

Plug: KQ2P, KQP

Applicable fitting size ød	Model Note)		øD	L	A	Weight (g)
3.2	**KQ2P-23**	**KQP-23**	5	31.5	16	1
4	**KQ2P-04**	**KQP-04**	6	32	16	1
6	**KQ2P-06**	**KQP-06**	8	35	18	1
8	**KQ2P-08**	**KQP-08**	10	39	20.5	2
10	**KQ2P-10**	**KQP-10**	12	43	22	3.5
12	**KQ2P-12**	**KQP-12**	14	45.5	24	5
16	**KQ2P-16**	**KQP-16**	20.9	47	22	8

Note) KQ2P (White), KQP (Blue)

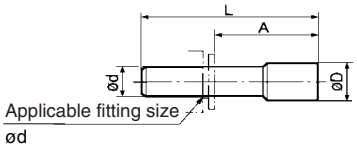

Made to Order Specifications:

Please consult with SMC for detailed specifications, dimensions and delivery.

1. Oil-free applications using Vaseline®

For use in oil-free applications, for example, paint air lines.

Specifications ····· Same as Series KQ2.
Dimensions ····· Same as Series KQ2.
How to Order ····· Add "-X12" at the end of the standard part number.
(Example: KQ2H06-02-X12)

2. Stainless One-touch fittings

For use in highly corrosive atmospheres where brass is not acceptable.

Specifications ····· Same as Series KQ2.
Dimensions ····· Same as Series KQ2. (Some may be different, please consult with SMC)

Materials in each part

Body*	Stainless steel□, PBT
Stud*	Stainless steel□(Thread portion)
Chuck	Stainless steel 304
Guide*	Stainless steel□, POM
Collet, Release button	POM
Seal, O-ring	NBR

* Every one of Stainless steel 303, Stainless steel 304 and Stainless steel 316 is possible to use.

How to Order ····· Please consult with SMC.

Uni One-touch Fittings

Series KQ2

Applicable Tubing: Metric Size
Connection Thread: Rc, G, NPT, NPTF

New-stand male thread for piping that reduces the screw-in time by 1/3.

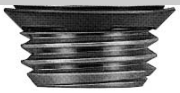

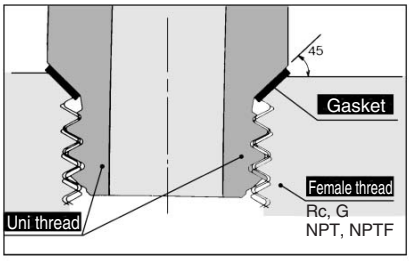

Uni thread ridge shape

A gasket made of a stainless sheet covered with laminated NBR on both sides is seated on the chamfer of a female thread for a perfect sealing construction irrespective of the difference in thread diameters due to the difference in the types of female threads, variation in tolerance, or difference in the size of chamfer. (It is applicable to any female thread with an ordinary chamfer.)

A ridge shape has been created as a Uni thread for common applications for Rc, G, NPT and NPTF.

The male thread for piping drastically cuts piping man-hours.

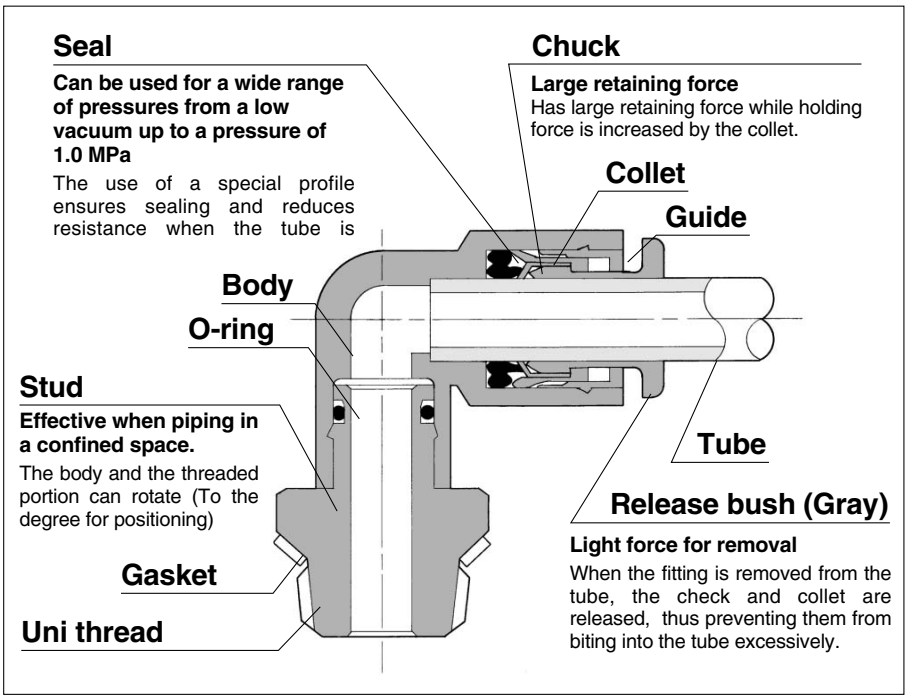

Applicable Tubing

Tubing material	Nylon, Soft nylon, Polyurethane
Tubing O.D.	ø4, ø6, ø8, ø10, ø12, ø16

Product's Color

Series	Body	Release button
Series KQ2	White	Light gray
Series KQ	Black	Blue

Specifications

Fluid	Air/Water Note)
Maximum operating pressure	1.0 MPa
Operating vacuum pressure	–100 kPa
Proof pressure	3.0 MPa
Ambient and fluid temperature	–5 to 60°C, Water: 0 to 40°C (No freezing)

Note) Applicable for general industrial water. Please consult with SMC if using for other kinds of fluid. Also, the surge pressure must be under the maximum operating pressure.

Principal Parts Material

Body	C3604BD, PBT
Stud	C3604BD (Thread portion)
Chuck	Stainless steel 304
Guide	Stainless steel 304, C3604BD, POM
Collet, Release button	POM
Seal, O-ring	NBR
Gasket	Stainless steel 304, NBR

Model

Hex. socket head male connector

KQ2S P. 36

Internal hex. allows thread connection by using an allen wrench for confined spaces.

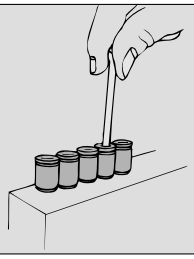

Universal male elbow

KQ2V P. 36

Universal male elbow allows thread connection by using a socket wrench for confined spaces.

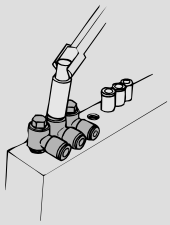

45° male elbow

KQ2K P. 36

Use to pipe in 45° direction from female thread. Model in-between of male connector and male elbow.

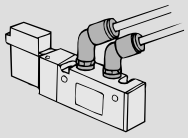

Extended male elbow

KQ2W P. 36

Basically, it is used together with male elbow. Different point is that it is used for fittings to avoid with interfering with each other by making the piping two-level.

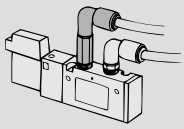

Male connector

KQ2H P. 34

Use to pipe in the same direction from female thread. Most general style.

Male elbow

KQ2L P. 34

Use to pipe at right angles to female thread. Most general style.

Male branch tee

KQ2T P. 34

Use to branch line from female thread in both 90° directions.

Branch "Y"

KQ2U P. 35

Use to branch line in the same direction from female thread.

Male run tee

KQ2Y P. 35

Use to branch line in the same direction from female thread and in 90° direction.

Gasket

KQG P. 36

Thread seal

How to Order

KQ 2 H 06 — U01

KQ — One-touch fittings

Product's color

Symbol	Body	Release button
2	White	Light gray
Nil	Black	Blue

Applicable tubing O.D.

04	ø4
06	ø6
08	ø8
10	ø10
12	ø12
16	ø16

Port size

Thread connection	U01	Uni 1/8
	U02	Uni 1/4
	U03	Uni 3/8
	U04	Uni 1/2

Model

H	Male connector	T	Male branch tee
S	Hex. socket head male connector	Y	Male run tee
L	Male elbow	U	Branch
K	45° male elbow		
V	Universal male elbow		
W	Extended male elbow		

How to Order Gasket

KQG — U01

KQG — Gasket for Uni One-touch fittings

Applicable port size

U01	Uni 1/8
U02	Uni 1/4
U03	Uni 3/8
U04	Uni 1/2

<Metric size> Male Connector: KQ2H

Applicable tubing O.D. (mm)	Connection thread Uni One-touch fittings	Model	H (width across flats)	L	A*	M	Effective area (mm²) Nylon	Effective area (mm²) Urethane	Weight (g)
4	1/8	**KQ2H04-U01**	10	18.5	13.5	16	5.6	5.6	5
	1/4	**KQ2H04-U02**	14	16.5	10.5				10
6	1/8	**KQ2H06-U01**	12	19.5	14.5	17	13.1	13.1	5
	1/4	**KQ2H06-U02**	14		13				10
	3/8	**KQ2H06-U03**	17	17.5	11.5				16
8	1/8	**KQ2H08-U01**	14	25	20.5	18.5	26.1	18.0	11
	1/4	**KQ2H08-U02**		21.5	15.5				27
	3/8	**KQ2H08-U03**	17	19.5	13.5				33
10	1/8	**KQ2H10-U01**	17	28	23	21	41.5	29.5	17
	1/4	**KQ2H10-U02**			22				17
	3/8	**KQ2H10-U03**		24	18				14
	1/2	**KQ2H10-U04**	22	22	14				28
12	1/4	**KQ2H12-U02**	19	30.5	24.5	22	58.3	46.1	22
	3/8	**KQ2H12-U03**		25.5	19.5				16
	1/2	**KQ2H12-U04**	22	24.5	16.5				28
16	3/8	**KQ2H16-U03**	24	33.5	27.5	24	81	(81)	39
	1/2	**KQ2H16-U04**		28.5	20.5		113	(96)	25

∗ Reference dimensions after Uni thread installation. Note) Dimensions in ( ) are the case of soft nylon tubing.

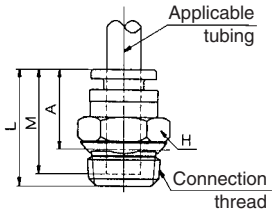

<Metric size> Male Elbow: KQ2L

Applicable tubing O.D. (mm)	Connection thread Uni One-touch fittings	Model	H (width across flats)	øD1	øD2	L1	L2	A*	M	Effective area (mm²) Nylon	Effective area (mm²) Urethane	Weight (g)
4	1/8	**KQ2L04-U01**	10	10.4	10	18	20	20.5	16	4.2	4.2	8
	1/4	**KQ2L04-U02**	14				22	21.5				14
6	1/8	**KQ2L06-U01**	10	12.8	10	20	21.5	23.5	17	11.4	11.4	9
	1/4	**KQ2L06-U02**	14				23					15
	3/8	**KQ2L06-U03**	17				24	24.5				23
8	1/8	**KQ2L08-U01**	12	15.2	12	23	22.5	25.5	18.5	21.6	14.9	11
	1/4	**KQ2L08-U02**	14				24.5	26				16
	3/8	**KQ2L08-U03**	17				25.5	27				24
10	1/8	**KQ2L10-U01**	17	18.5	17	26.5	25	29.5	21	21.6	14.9	24
	1/4	**KQ2L10-U02**					26.5	30		35.2	25.0	21
	3/8	**KQ2L10-U03**					27	30.5				25
	1/2	**KQ2L10-U04**	22				30	31.5				45
12	1/4	**KQ2L12-U02**	17	20.9	17	28.5	27	31.5	22	50.2	39.7	23
	3/8	**KQ2L12-U03**					28	32.5				27
	1/2	**KQ2L12-U04**	22				31	33.5				48
16	3/8	**KQ2L16-U03**	22	26.5	21	33	40.5	33	24	71	(71)	49
	1/2	**KQ2L16-U04**						35		100	(84)	50

∗ Reference dimensions after Uni thread installation. Note) Dimensions in ( ) are the case of soft nylon tubing.

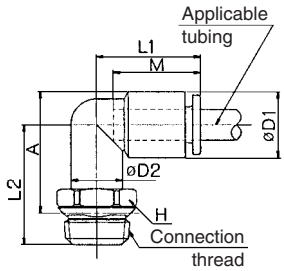

<Metric size> Male Branch Tee: KQ2T

Applicable tubing O.D. (mm)	Connection thread Uni One-touch fittings	Model	H (width across flats)	øD1	øD2	L1	L2	A*	M	Effective area (mm²) Nylon	Effective area (mm²) Urethane	Weight (g)
4	1/8	**KQ2T04-U01**	10	10.4	10	18	20	21.5	16	6.0	6.0	9
	1/4	**KQ2T04-U02**	14				22					15
6	1/8	**KQ2T06-U01**	10	12.8	10	20	21.5	23.5	17	13.9	13.9	11
	1/4	**KQ2T06-U02**	14				23					17
	3/8	**KQ2T06-U03**	17				24	24.5				26
8	1/8	**KQ2T08-U01**	12	15.2	12	23	22.5	26	18.5	26.3	18.2	15
	1/4	**KQ2T08-U02**	14				24.5					20
	3/8	**KQ2T08-U03**	17				25.5	27				28
10	1/8	**KQ2T10-U01**	17	18.5	17	26.5	25	29.5	21	40.8	29.0	30
	1/4	**KQ2T10-U02**					26.5	30				27
	3/8	**KQ2T10-U03**					27	30.5				31
	1/2	**KQ2T10-U04**	22				30	31.5				51
12	1/4	**KQ2T12-U02**	17	20.9	17	28.5	27	31.5	22	57.2	45.2	31
	3/8	**KQ2T12-U03**					28	32.5				34
	1/2	**KQ2T12-U04**	22				31	33.5				54
16	3/8	**KQ2T16-U03**	22	26.9	21	33	40.5	33	24	71	(71)	62
	1/2	**KQ2T16-U04**						35		100	(100)	63

∗ Reference dimensions after Uni thread installation. Note) Dimensions in ( ) are the case of soft nylon tubing.

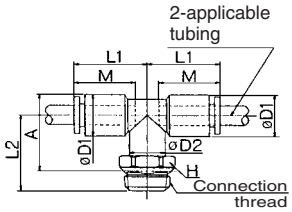

<Metric size> Male Run Tee: KQ2Y

Applicable tubing O.D. (mm)	Connection thread Uni One-touch fittings	Model	H (width across flats)	øD1	øD2	L1	L2	A	M	Effective area (mm²) Nylon	Effective area (mm²) Urethane	Weight (g)
4	1/8	**KQ2Y04-U01**	10	10.4	10	18	20	34	16	6.4	6.4	9
	1/4	**KQ2Y04-U02**	14				22	34.5				15
6	1/8	**KQ2Y06-U01**	10	12.8	10	20	21.5	37.5	17	13.4	13.4	11
	1/4	**KQ2Y06-U02**	14				23	37				17
	3/8	**KQ2Y06-U03**	17				24	38				26
8	1/8	**KQ2Y08-U01**	12	15.2	12	23	22.5	41.5	18.5	25.6	17.7	15
	1/4	**KQ2Y08-U02**	14				24.5					19
	3/8	**KQ2Y08-U03**	17				25.5	42.5				28
10	1/8	**KQ2Y10-U01**	17	18.5	17	26.5	25	46.5	21	40.0	28.4	30
	1/4	**KQ2Y10-U02**					26.5	47.5				27
	3/8	**KQ2Y10-U03**					27	48				31
	1/2	**KQ2Y10-U04**	22				30	49				51
12	1/4	**KQ2Y12-U02**	17	20.9	17	28.5	27	49.5	22	57.4	45.4	31
	3/8	**KQ2Y12-U03**					28	50.5				35
	1/2	**KQ2Y12-U04**	22				31	51.5				55
16	3/8	**KQ2Y16-U03**	22	26.5	21	33	40.5	66	24	81	(81)	61
	1/2	**KQ2Y16-U04**						63		113	(113)	62

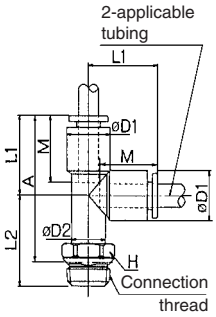

∗ Reference dimensions after Uni thread installation. Note) Dimensions in ( ) are the case of soft nylon tubing.

<Metric size> Branch: KQ2U

Applicable tubing O.D. (mm)	Connection thread Uni One-touch fittings	Model	H (width across flats)	øD	L	P	A∗	M	Effective area (mm²) Nylon	Effective area (mm²) Urethane	Weight (g)
4	1/8	**KQ2U04-U01**	11	10.4	40	10.4	36	16	4.2	4.2	11
	1/4	**KQ2U04-U02**	14		42						16
6	1/8	**KQ2U06-U01**	13	12.8	43.5	12.8	39.5	17	13.4	13.4	14
	1/4	**KQ2U06-U02**	14		45		39				18
	3/8	**KQ2U06-U03**	17		46		40				26
8	1/8	**KQ2U08-U01**	17	15.2	50.5	15.2	46.5	18.5	25.6	17.7	27
	1/4	**KQ2U08-U02**			52		46				25
	3/8	**KQ2U08-U03**			51.5		45.5				28
10	1/4	**KQ2U10-U02**	19	18.5	57.5	18.5	51.5	21	40	28.4	38
	3/8	**KQ2U10-U03**									36
	1/2	**KQ2U10-U04**	22		59		51				51
12	1/4	**KQ2U12-U02**	22	20.9	61	20.9	55	22	57.4	45.4	53
	3/8	**KQ2U12-U03**									52
	1/2	**KQ2U12-U04**			62.5		54.5				52

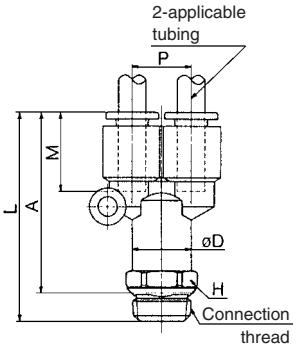

∗ Reference dimensions after Uni thread installation.

<Metric size> Extended Male Elbow: KQ2W

Applicable tubing O.D. (mm)	Connection thread Uni One-touch fittings	Model	H (width across flats)	øD1	øD2	L1	L2	A∗	M	Effective area (mm²) Nylon	Effective area (mm²) Urethane	Weight (g)
4	1/8	**KQ2W04-U01**	10	10.4	10	18	34.5	35.5	16	4.0	4.0	16
	1/4	**KQ2W04-U02**	14				37	38.5				26
6	1/8	**KQ2W06-U01**	10	12.8	10	20	38.5	41	17	10.9	10.9	18
	1/4	**KQ2W06-U02**	14				40.5					29
	3/8	**KQ2W06-U03**	17				41.5	42				40
8	1/8	**KQ2W08-U01**	12	15.2	12	23	43.5	46.5	18	20.5	14.2	28
	1/4	**KQ2W08-U02**	14				45.5	47				35
	3/8	**KQ2W08-U03**	17				46	48				46
10	1/4	**KQ2W10-U02**	17	18.5	17	26.5	52.5	56	21	33.5	23.8	67
	3/8	**KQ2W10-U03**										57
	1/2	**KQ2W10-U04**	22				54.5					98
12	1/4	**KQ2W12-U02**	17	20.9	17	28.5	54	58.5	22	47.7	37.7	69
	3/8	**KQ2W12-U03**										59
	1/2	**KQ2W12-U04**	22				56					99

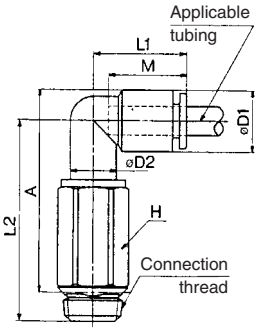

∗ Reference dimensions after Uni thread installation.

<Metric size> Hexagon Socket Head Male Connector: KQ2S

Applicable tubing O.D. (mm)	Connection thread Uni One-touch fittings	Model	H (width across flats)	øD	L	A*	M	Effective area (mm²) Nylon	Effective area (mm²) Urethane	Weight (g)
4	1/8	**KQ2S04-U01**	3	10	23.5	18.5	16	4.1	3.6	7
6	1/8	**KQ2S06-U01**	4	11.8	24	19	17	10.0	9.9	9
	1/4	**KQ2S06-U02**		13.5		18		10.7	10.0	12
8	1/8	**KQ2S08-U01**	5	14	27.5	22.5	18.5	17.2	16.2	12
	1/4	**KQ2S08-U02**	6		28	22		23.3		14
	3/8	**KQ2S08-U03**		17	27.5	21.5				24
10	1/8	**KQ2S10-U01**	5	17	30	25	21	17.2	10.0	18
	1/4	**KQ2S10-U02**	8		29	23		39.0	26.6	17
	3/8	**KQ2S10-U03**			28.5	22.5				19
	1/2	**KQ2S10-U04**		21	29	21				36
12	1/4	**KQ2S12-U02**	8	19	30.5	25	22	46.0	44.5	20
	3/8	**KQ2S12-U03**	9		31			60.0		22
	1/2	**KQ2S12-U04**		21	28.5	20.5				30

∗ Reference dimensions after Uni thread installation.

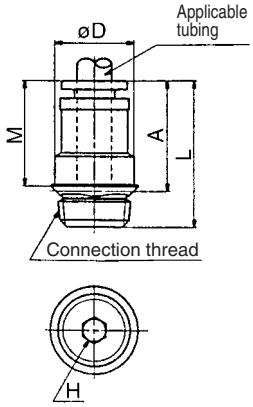

<Metric size> 45° Male Elbow: KQ2K

Applicable tubing O.D. (mm)	Connection thread Uni One-touch fittings	Model	H (width across flats)	øD1	øD2	L1	L2	A*	M	Effective area (mm²) Nylon	Effective area (mm²) Urethane	Weight (g)
4	1/8	**KQ2K04-U01**	10	10.4	10	17	18.5	30	16	3.4	3.4	6
	1/4	**KQ2K04-U02**	14				20.5	30.5				13
6	1/8	**KQ2K06-U01**	10	12.8	10	18	18.5	31	17	8.7	8.7	7
	1/4	**KQ2K06-U02**	14				20.5					13
	3/8	**KQ2K06-U03**	17				21.5	32				23
8	1/8	**KQ2K08-U01**	12	15.2	12	20.5	20	35	18.5	19.7	13.6	11
	1/4	**KQ2K08-U02**	14				22					15
	3/8	**KQ2K08-U03**	17				23	36				24
10	1/8	**KQ2K10-U01**	17	18.5	17	24	22	38	21	21.6	14.9	24
	1/4	**KQ2K10-U02**					23.5	40.5		30.9	23.2	21
	3/8	**KQ2K10-U03**					24	41				25
	1/2	**KQ2K10-U04**	22				27	42				45
12	1/4	**KQ2K12-U02**	17	20.9	17	25	24	42	22	44.5	35.1	23
	3/8	**KQ2K12-U03**					24.5	42.5				27
	1/2	**KQ2K12-U04**	22				27.5	43.5				46

∗ Reference dimensions after Uni thread installation.

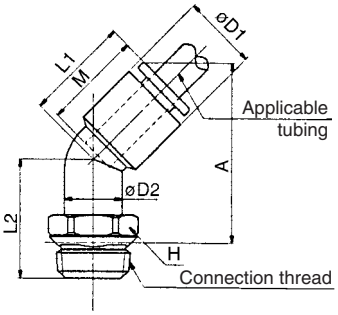

<Metric size> Universal Male Elbow: KQ2V

Applicable tubing O.D. (mm)	Connection thread Uni One-touch fittings	Model	H (width across flats)	øD1	øD2	L1	L2	L3	A*	M	Effective area (mm²) Nylon	Effective area (mm²) Urethane	Weight (g)
4	1/8	**KQ2V04-U01**	8	10.4	13.4	22	13.5	25.5	20.5	16	2.9	2.9	12
6	1/8	**KQ2V06-U01**	8	12.8	13.4	24	13.5	25.5	20.5	17	7.5	7.5	13
	1/4	**KQ2V06-U02**	10		15.4	23.5	15.5	28	22				21
8	1/8	**KQ2V08-U01**	12	15.2	17.6	28.5	14.5	27.5	22.5	18.5	11.2	24	22
	1/4	**KQ2V08-U02**					16.5	29.5	23.5			30	25
	3/8	**KQ2V08-U03**	14		20.6	27.5	18.5	34	28		14.3	47	36
10	1/4	**KQ2V10-U02**	14	18.5	20.6	31	18.5	34	28	21	27	20.3	35
	3/8	**KQ2V10-U03**											38
12	3/8	**KQ2V12-U03**	17	20.9	25.2	34	20	36.5	30.5	22	39	30.8	52
	1/2	**KQ2V12-U04**					22.5	39.5	31.5				62

∗ Reference dimensions after Uni thread installation.

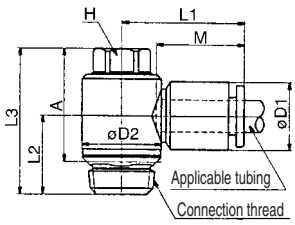

<Metric size> Gasket: KQG

Connection thread Uni One-touch fittings	Model	øD	Weight (g)
1/8	**KQG-U01**	11.8	0.12
1/4	**KQG-U02**	15.3	0.19
3/8	**KQG-U03**	18.7	0.23
1/2	**KQG-U04**	23.4	0.34

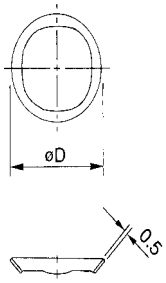

⚠Precautions

Be sure to read before handling.
Refer to pages 15-18-3 to 15-18-4 for Safety Instructions and Common Precautions on the products mentioned in this catalog, and refer to pages 15-1-10 to 15-1-11 for Precautions on every series.

Handling and Precautions

⚠Caution

1. First tighten by hand, then use a proper wrench, which could be suitable for the hexagon across flats on the body to tighten with the proper tightening torque given below.

Connecting Female Thread: Rc, NPT, NPTF

Nominal size of Uni thread	Recommended tightening torque (N·m)	Approx. spanner tightening angle after tightened by hand
1/8	5 to 7	30 to 60
1/4	11 to 13	30 to 60
3/8	14 to 16	15 to 45
1/2	20 to 22	15 to 30

Connecting Female Thread: G

Nominal size of Uni thread	Recommended tightening torque (N·m)	Approx. spanner tightening angle after tightened by hand
1/8	3 to 4	30 to 45
1/4	4 to 5	15 to 30
3/8	8 to 9	15 to 30
1/2	14 to 15	15 to 30

2. Gasket can be recycled 6 to 10 times. It can be replaced easily when it has sustained damage. A broken gasket can be removed by holding and then turning in the same direction of loosening the thread. If it is difficult to remove, cut it with nippers, etc. In such a case, use caution not to scratch seat face because the seat face of 45° gasket of fitting is the sealing face.
3. Please consult with SMC if using for other fluids than air.
4. Other precautions on handling, etc. are the same as those of One-touch fittings.

Chamfered area for female thread (Recommended value)

By chamfering as shown in the following table, machining of threads is easier and effective for burr prevention, too.

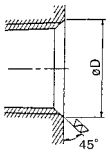

Female thread size	Chamfered port size øD (Recommended value)	
	Rc, G	NPT, NPTF
1/8	10.2 to 11.8	10.5 to 11.8
1/4	13.6 to 15.8	14.1 to 15.8
3/8	17.1 to 19.4	17.4 to 19.4
1/2	21.4 to 25.1	21.7 to 25.1

Inch-size One-touch Fittings

Series KQ2

Applicable Tubing: Inch Size
Connection Thread: UNF, NPT

How to Order

KQ 2 H 05 – 34 S

- KQ: One-touch fittings
- 2: Product's color
- H: Model
- 05: Applicable tubing O.D.
- 34: Port size/Applicable tubing O.D.
- S: With thread seal

Product's color

Symbol	Body	Release button
2	White	Orange
Nil	Black	Red

Applicable tubing O.D.

01	1/8
03	5/32
05	3/16
07	1/4
09	5/16
11	3/8
13	1/2

Port size/Applicable tubing O.D.

Thread connection	32	10-32 UNF
	33	NPT 1/16
	34	NPT 1/8
	35	NPT 1/4
	36	NPT 3/8
	37	NPT 1/2
Tubing (Rod) connection	00	Same dia. tubing
	99	Same dia. rod
	01	1/8 tubing
	03	5/32 tubing
	05	3/16 tubing
	07	1/4 tubing
	09	5/16 tubing
	11	3/8 tubing
	13	1/2 tubing

With thread seal

Nil	None
S	With thread seal

Note) Port size with seal: Only
NPT 1/16
NPT 1/8
NPT 1/4
NPT 3/8
NPT 1/2

Model

H	Male connector
	Straight
	Different dia. straight *
S	Hexagon socket head male connector *
F	Female union *
L	Male elbow
	Elbow
	Plug-in elbow
	Reducer elbow
K	45° male elbow *
V	Universal male elbow *
VS	Hexagon socket head universal male elbow *
VF	Universal female elbow *
LF	Female elbow *
VD	Double universal male elbow *
VT	Tripple universal male elbow *
Z	Branch universal male elbow *
ZD	Double branch universal male elbow *
ZT	Triple branch universal male elbow *
W	Extended male elbow
T	Male branch tee
	Union tee
	Different dia. tee *
TW	Cross union
Y	Male run tee *
U	Branch "Y"
	Union "Y"
	Plug-in "Y"
	Different dia. union "Y" *
X	Different dia. plug-in "Y" *
R	Plug-in reducer
E	Bulkhead union
	Bulkhead connector
LE	Bulkhead union elbow *

* Available only for KQ2 (White color body).

Accessory

Symbol	Name
KQ2N	Nipple
	Reducer nipple
KQ2C	Tube cap
KQ2P (KQP)	Plug (Orange)

Use the below part number to order the gasket for sealing 10-32 UNF thread.
Gasket for 10-32 UNF: M-10/32G

Series KQ2: White body
Series KQ: Black body

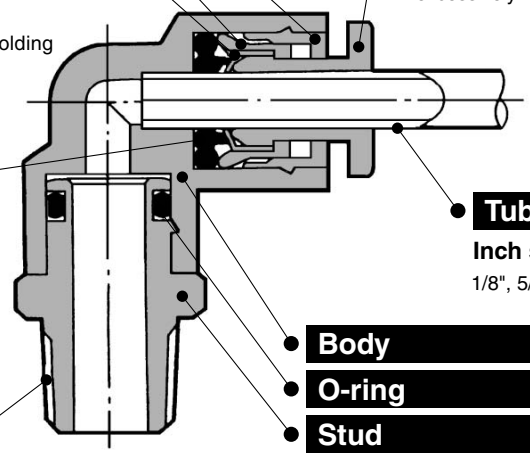

Guide

Collet

Chuck

Suitable for use with nylon, soft nylon and urethane.
Large retaining force.
Has large retaining force while holding force is increased by the collet.

Release button

KQ2: Orange
KQ : Red
Light force for removal
When the fitting is removed from the tube, the chuck and collet are released, thus preventing them from biting into the tube excessively.

Seal

Can be used for a wide range of pressures from a low vacuum up to a pressure of 1.0 MPa
The use of a special profile ensures sealing and reduces resistance when the tube is inserted.

Tube

Inch size
1/8", 5/32", 3/16", 1/4", 5/16", 3/8", 1/2"

Body

O-ring

Connection thread

UNF, NPT

Stud

Effective when piping in a confined space.
The body and the threaded portion can rotate (for positioning to some extent).

PAT.

Product's Color

Series	Body	Release button
Series KQ2	White	Orange
Series KQ	Black	Red

Applicable Tubing

Tubing material	Nylon, Soft nylon, Polyurethane
Tubing O.D. (inch)	ø1/8, ø5/32, ø3/16, ø1/4, ø5/16, ø3/8, ø1/2

Specifications

Fluid		Air/Water Note)
Maximum operating pressure		1.0 MPa
Operating vacuum pressure		–100 kPa
Proof pressure		3.0 MPa
Ambient and fluid temperature		–5 to 60°C, Water: 0 to 40°C (No freezing)
Thread	Mounting section	ANSI/ASMEB1.20.1-1983 (NTP thread) JIS B 0212 2A, Class 2B (UNF thread)
	Nut section	JIS B 0212 2A, Class 2B (UNF thread)
Seal (Thread portion)		With thread seal

Note) Applicable for general industrial water. Please consult with SMC if using for other kinds of fluid.
Also, the surge pressure must be under the maximum operatin g pressure.

Principal Parts Material

Body	C3604BD, PBT, PP
Stud	C3604BD (Thread portion)
Chuck	Stainless steel 304
Guide	Stainless steel 304, C3604BD, POM
Collet	POM
Release button	POM
Seal, O-ring	NBR
Gasket	Stainless steel 304, NBR

Model

Hex. socket head male connector

KQ2S P. 13

Internal hex. allows thread connection by using an allen wrench for confined spaces.

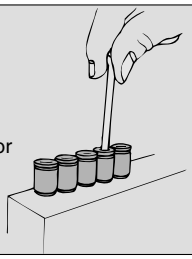

Universal male elbow

KQ2V P. 15

Universal male elbow allows thread connection by using a socket wrench for confined spaces.

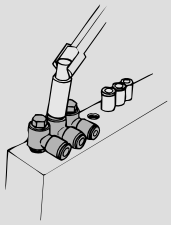

45° male elbow

KQ2K P. 15

Use to pipe in 45° angle direction from female thread. Model in-between of male connector and male elbow.

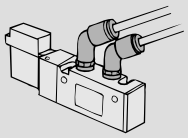

Extended male elbow

KQ2W P. 19

Basically, it is used together with male elbow. Different point is that it is used for fittings to avoid from interfering with each other by making the piping two-level.

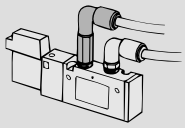

Bulkhead union

KQ2E P. 22

Use to connect tubes through a panel.

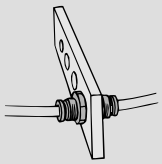

Bulkhead connector

KQ2E P. 23

Use to connect male thead and tube through a panel.

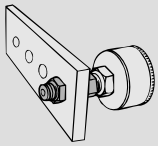

Nipple

KQ2N P. 23

Use to connect One-touch fittings.

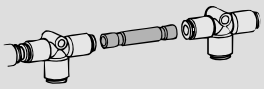

Reducer nipple

KQ2N P. 23

Use to connect One-touch fittings that are different tubing O.Ds.

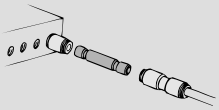

Male connector

KQ2H P. 13

Use to pipe in the same direction from female thread. Most general style.

Hexagon socket head universal male elbow

KQ2VS P. 15

Hex. on the top allows thread connection by using an allen wrench for confined spaces.

Branch universal male elbow

KQ2Z P. 17

Hexagonal head allows thread connection by using a box wrench. Use for branch connection.

Female connector

KQ2F P. 13

Use to pipe from male thread such as pressure gauge.

Universal female elbow

KQ2VF P. 16

Use to branch line in the same direction or at right angles from male or female thread. Multiplex connection possible.

Double branch universal male elbow

KQ2ZD P. 17

Use to four-branch line at right angles from female thread. Two individual parts rotate 360°.

Straight union

KQ2H P. 14

Use to connect tubes in the same direction.

Female elbow

KQ2LF P. 16

Use to pipe at right angles to male thread.

Triple branch universal male elbow

KQ2ZT P. 18

Use to six-branch line at right angles from female thread. Three individual parts rotate 360°.

Different diameter straight

KQ2H P. 14

Use to connect different sized tubes.

Double universal male elbow

KQ2VD P. 16

Use to branch line at right angles to female thread. Two individual parts rotate 360°.

Union elbow

KQ2L P. 18

Use to connect tubes at right angles.

Male elbow

KQ2L P. 14

Use to pipe at right angles to female thread. Most general style.

Triple universal male elbow

KQ2VT P. 17

Use to three-branch line at right angles from female thread. Three individual parts rotate 360°.

Plug-in elbow

KQ2L

P. 18

Use to change by 90° in a tube fetching direction from One-touch fittings and to size down.

Reducer elbow
KQ2L

P. 18

Use to change by 90° in tube fetching direction from One-touch fittings and to size down.

Male branch tee
KQ2T

P. 19

Use to branch line from female thread in both 90° directions.

Union tee
KQ2T

P. 19

Use to connect tubes in both 90° directions.

Different diameter tee
KQ2T

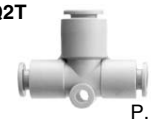

P. 20

Use to connect tubes with size down in both 90° directions.

Cross
KQ2TW

P. 20

Use to four-branch line.

Male run tee
KQ2Y P. 20

Use to branch line in the same direction from female thread and in 90° direction.

Branch "Y"
KQ2U P. 21

Use to branch line in the same direction from female thread.

Union "Y"
KQ2U P. 21

Use to branch line in the same direction.

Different dia. union "Y"
KQ2U P. 21

Use to branch line with size down in the same direction.

Plug-in "Y"
KQ2U P. 21

Use to branch line in the same direction from One-touch fittings.

Different diameter plug-in "Y"
KQ2X P. 22

Use to four-branch line from One-touch fitting with size down.

Plug-in reducer
KQ2R P. 22

Use to change size of One-touch fittings.

Bulkhead male elbow
KQ2LE P. 22

Use to connect tubes through a panel, changing by 90° in a tube fetching direction.

Tube cap
KQ2C P. 23

Use to plug unused tube.

Plug
KQ2P, KQP P. 23

Use to plug unused One-touch fittings.
KQP (Orange)
KQ2P (Orange)

Gasket/10-32 UNF seal on thread

Part no.: M-10/32G
Material: Stainless steel 304, NBR

Male Connector: KQ2H

01-32
For KQ2H03-32
07-32

<For KQ2H05-32>

<NPT>

Applicable tubing O.D. (inch)	Connection thread UNF NPT	Model	H (Width across flats)	Note) øD	L	A	M	Min. port size	Weight (g)
1/8	10-32 UNF	**KQ2H01-32**	7	—	16.7	13.7	12.7	2.3	2
	1/16	**KQ2H01-33S**	11.11	—	22	18 *	15.5	2.5	7
	1/8	**KQ2H01-34S**		—					9
	1/4	**KQ2H01-35S**	14.29	—	19.5	13.5 *			16
5/32	10-32 UNF	**KQ2H03-32**	8	—	17	14	12.7	2.3	2.4
	1/16	**KQ2H03-33S**	11.11	—	22	18 *	16	3	7
	1/8	**KQ2H03-34S**		—					9
	1/4	**KQ2H03-35S**	14.29	—	19.5	13.5 *			16
3/16	10-32 UNF	**KQ2H05-32**	8	11	24	20.4	16.5	2.3	6
	1/8	**KQ2H05-34S**	12.7	—	22	18 *		3.5	11
	1/4	**KQ2H05-35S**	14.29	—	21	15 *			12
1/4	10-32 UNF	**KQ2H07-32**	11.11	—	18.4	15.4	13.6	2.3	3.3
	1/8	**KQ2H07-34S**	12.7	—	22.5	18.5 *	17	4.6	10
	1/4	**KQ2H07-35S**	14.29	—	23	17 *			15
	3/8	**KQ2H07-36S**	17.46	—	22	16.5 *			27
5/16	1/8	**KQ2H09-34S**	14.29	—	28.5	24.5 *	18.5	6	15
	1/4	**KQ2H09-35S**		—	26.5	20.5 *			16
	3/8	**KQ2H09-36S**	17.46	—	22	15.5 *			24
3/8	1/8	**KQ2H11-34S**	17.46	—	30.5	26.5 *	21	6	29
	1/4	**KQ2H11-35S**		—	33.5	27.5 *		7	31
	3/8	**KQ2H11-36S**		—	29	22.5 *			29
	1/2	**KQ2H11-37S**	22.23	—	26.5	18.5 *			46
1/2	1/4	**KQ2H13-35S**	22.23	—	34.5	28.5 *	22	9	44
	3/8	**KQ2H13-36S**		—	33	26.5 *		9.6	44
	1/2	**KQ2H13-37S**		—	30	22 *			44

* Reference dimensions after NPT thread installation.
Note) øD: Max. diameter

01-32
For KQ2H03-32
07-32

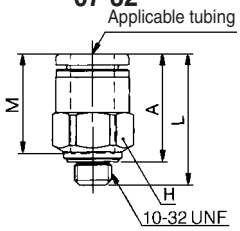

<For KQ2H05-32>

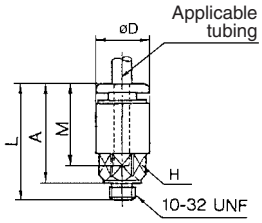

<NPT>

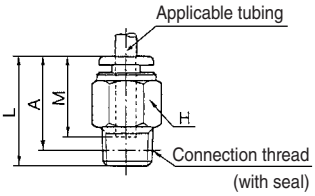

Hexagon Socket Head Male Connector: KQ2S

<10-32 UNF>

<NPT>

Applicable tubing O.D. (inch)	Connection thread UNF NPT	Model	H (Width across flats)	Note) øD	L	A *	M	Min. port size	Weight (g)
1/8	10-32 UNF	**KQ2S01-32**	2	7	19.7	16.6	12.7	2	2.8
5/32	10-32 UNF	**KQ2S03-32**	2.5	8	18.7	15.6	12.7	2.3	2.7
	1/8	**KQ2S03-34S**	2.78	10.5	23.5	19.5	16	2.8	8
3/16	1/8	**KQ2S05-34S**	3.57	10.7	23.5	19.5	16.5	3.6	8
1/4	10-32 UNF	**KQ2S07-32**	2.5	10.3	19.6	16.5	13.6	2.3	3.3
	1/8	**KQ2S07-34S**	4.76	12.5	22	18	17	4.9	7
	1/4	**KQ2S07-35S**		13.8	23	17			12
	3/8	**KQ2S07-36S**		17	27	21			27
5/16	1/8	**KQ2S09-34S**	5.56	14	28	24	18.5	5.7	12
	1/4	**KQ2S09-35S**	6.35		25.5	19.5		6.5	11
	3/8	**KQ2S09-36S**		17.5	27.5	21			25
3/8	1/8	**KQ2S11-34S**	5.56	16.5	30	26	21	5.7	17
	1/4	**KQ2S11-35S**	6.35	16.5	32	26	21	6.5	21
	3/8	**KQ2S11-36S**		17.2	29	23			25
	1/2	**KQ2S11-37S**		21.3	30	22			45
1/2	1/4	**KQ2S13-35S**	7.94	20	34.5	28.5	22	8	26
	3/8	**KQ2S13-36S**	9.53		33	26.5	22	9.6	27
	1/2	**KQ2S13-37S**		21.3	31	22.5			36

* Reference dimensions after NPT thread installation.
Note) øD: Max. diameter

<10-32 UNF> **<NPT>**

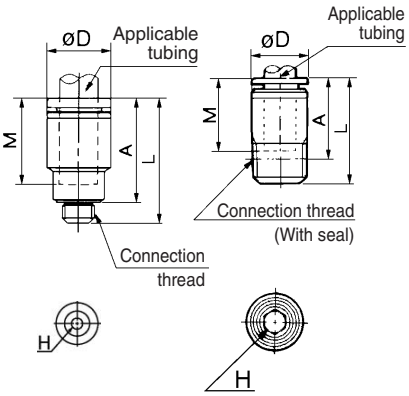

Female Connector: KQ2F

Applicable tubing O.D. (inch)	Connection thread UNF NPT	Model	H (Width across flats)	Note) øD	L1	L2	M	Min. port size	Weight (g)
1/8	1/8	**KQ2F01-34**	14.29	9.2	26.5	11.5	15.5	2.5	16
	1/4	**KQ2F01-35**	17.46		30.5	14.5			26
5/32	1/8	**KQ2F03-34**	14.29	10	27	11	16	3	15
	1/4	**KQ2F03-35**	17.46		31	13.5			24
1/4	1/8	**KQ2F07-34**	14.29	12.5	27.5	10.5	17	4.6	17
	1/4	**KQ2F07-35**	17.46		31	13.5			25
	3/8	**KQ2F07-36**	22.23		33.5	15.5			44
5/16	1/8	**KQ2F09-34**	14.29	14	29	10.5	18.5	6	18
	1/4	**KQ2F09-35**	17.46		32.5	13.5			26
	3/8	**KQ2F09-36**	22.23		34.5	13			38
3/8	1/4	**KQ2F11-35**	17.46	16.5	34.5	15	21	7	30
	3/8	**KQ2F11-36**	22.23		36.5				48
	1/2	**KQ2F11-37**	23.81		40.5	19			52
1/2	3/8	**KQ2F13-36**	22.23	20	36.5	14.5	22	9.6	48
	1/2	**KQ2F13-37**	23.81		41	18.5			53

Note) øD: Max. diameter

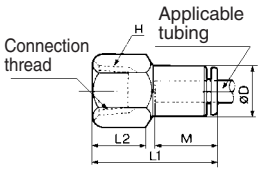

Straight Union: KQ2H

Applicable tubing O.D. (inch)	Model	Note) øD	L	M	Min. port size	Weight (g)
1/8	**KQ2H01-00**	9.6	31.5	15.5	2.5	3
5/32	**KQ2H03-00**	10.4	32.5	16	3	3
3/16	**KQ2H05-00**	11.4	34	16.5	3.5	4
1/4	**KQ2H07-00**	13.2	34.5	17	4.6	4
5/16	**KQ2H09-00**	15.2	38.5	18.5	6	6
3/8	**KQ2H11-00**	17.9	42.5	21	7	11
1/2	**KQ2H13-00**	21.7	44.5	22	9.6	16

Note) øD: Max. diameter

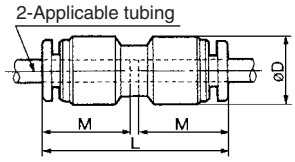

Different Diameter Straight: KQ2H

Applicable tubing O.D. (inch) ⓐ	Applicable tubing O.D. (inch) ⓑ	Model	Note) øD	L	M1	M2	Min. port size	Weight (g)
1/8	5/32	**KQ2H01-03**	10.4	32.5	15.5	16	2.5	3
	1/4	**KQ2H01-07**	13.2	34.5		17		5
5/32	3/16	**KQ2H03-05**	11.4	34	16	16.5	3	4
	1/4	**KQ2H03-07**	13.2	34.5		17		4
3/16	1/4	**KQ2H05-07**	13.2	34.5	16.5	17	3.5	5
1/4	5/16	**KQ2H07-09**	15.2	38.5	17	18.5	4.6	6
	3/8	**KQ2H07-11**	17.9	42		21		11
5/16	3/8	**KQ2H09-11**	17.9	42	18.5	21	6	11
	1/2	**KQ2H09-13**	21.7	44		22		16
3/8	1/2	**KQ2H11-13**	21.7	44	21	22	7	17

Note) øD: Max. diameter

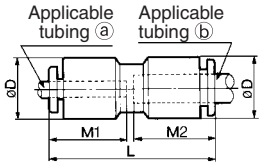

Male Elbow: KQ2L

01-32
For KQ2L03-32
07-32

<For KQ2L05-32>

<NPT>

Applicable tubing O.D. (inch)	Connection thread UNF NPT	Model	H (Width across flats)	Note) øD1	øD2	L1	L2	A	M	Min. port size	Weight (g)
1/8	10-32 UNF	**KQ2L01-32**	7	8.4	—	15.3	13.2	14	12.7	2.3	2.5
	1/16	**KQ2L01-33S**	11.11	9.6	10	17.5	21.5	22.5 *	15.5	2.5	8
	1/8	**KQ2L01-34S**									
	1/4	**KQ2L01-35S**	14.29				25.5	24.5 *			18
5/32	10-32 UNF	**KQ2L03-32**	7	9.3	—	15.6	13.7	15.4	12.7	2.3	2.7
	1/16	**KQ2L03-33S**	11.11	10.4	10	18	22	23 *	16	3	8
	1/8	**KQ2L03-34S**									9
	1/4	**KQ2L03-35S**	14.29				26	25 *			18
3/16	10-32 UNF	**KQ2L05-32**	11.11	11.4	10	19.5	20	22	16.5	2.3	5
	1/8	**KQ2L05-34S**					22.5	24 *		3.5	10
	1/4	**KQ2L05-35S**	14.29				26.5	26 *			19
1/4	10-32 UNF	**KQ2L07-32**	7	12	—	16.1	15.1	18.1	13.6	2.3	3.2
	1/8	**KQ2L07-34S**	11.11	13.2	10	20.5	23.5	26 *	17	4.6	10
	1/4	**KQ2L07-35S**	14.29				27.5	28 *			20
	3/8	**KQ2L07-36S**	17.46				29.5	30 *			32
5/16	1/8	**KQ2L09-34S**	12.7	15.2	12	23.5	24.5	28 *	18.5	6	12
	1/4	**KQ2L09-35S**	14.29				28.5	30 *			20
	3/8	**KQ2L09-36S**	17.46				30.5	31.5 *			28
3/8	1/8	**KQ2L11-34S**	17.46	17.9	17	25.5	26.5	31.5 *	21	6	16
	1/4	**KQ2L11-35S**					29.5	32.5 *		7	23
	3/8	**KQ2L11-36S**					31.5	34 *			33
	1/2	**KQ2L11-37S**	22.23				35.5	36.5 *			59
1/2	1/4	**KQ2L13-35S**	17.46	21.7	17	28	31.5	36.5 *	22	9	28
	3/8	**KQ2L13-36S**					33.5	38.5 *		9.6	36
	1/2	**KQ2L13-37S**	22.23				37.5	40 *			62

* Reference dimensions after NPT thread installation.
Note) øD1: Max. diameter

01-32
For KQ2L03-32
07-32

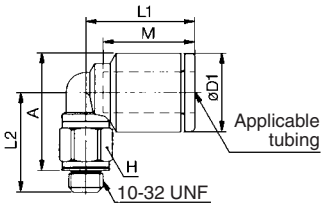

<For KQ2L05-32>

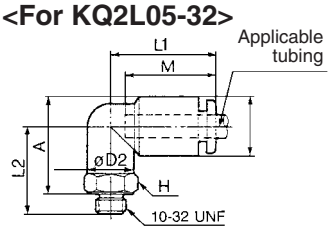

<NPT>

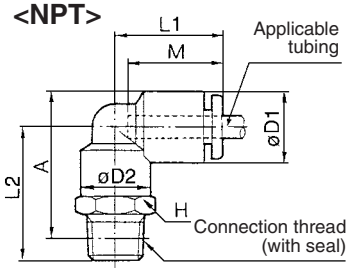

45° Male Elbow: KQ2K

<10-32 UNF>

<NPT>

Applicable tubing O.D. (inch)	Connection thread UNF NPT	Model	H (Width across flats)	Note) øD1	øD2	L1	L2	A *	M	Min. port size	Weight (g)
1/8	10-32 UNF	**KQ2K01-32**	8	9.6	8	16.5	15	25.5	15.5	2.3	4
	1/8	**KQ2K01-34S**	11.11		10	16.5	22.5	33	15.5	2.5	9
5/32	10-32 UNF	**KQ2K03-32**	8	10.4	8	17	14.5	26	16	2.3	4
	1/8	**KQ2K03-34S**	11.11		10		20.5	32		2.8	9
3/16	1/8	**KQ2K05-34S**	11.11	11.4	10	18	20.5	32.5	16.5	3.6	10
1/4	10-32 UNF	**KQ2K07-32**	11.11	13.2	10	19	18	32	17	2.3	8
	1/8	**KQ2K07-34S**					20.5	34		4.6	10
	1/4	**KQ2K07-35S**	14.29				24.5	36			19
	3/8	**KQ2K07-36S**	17.46				26.5	37.5			32
5/16	1/8	**KQ2K09-34S**	12.7	15.2	12	20.5	22	37	18.5	6	11
	1/4	**KQ2K09-35S**	14.29				26	39			19
	3/8	**KQ2K09-36S**	17.46				28	41			32
3/8	1/8	**KQ2K11-34S**	17.46	17.9	17	23.5	24	42	21	6	25
	1/4	**KQ2K11-35S**					27	43		7	25
	3/8	**KQ2K11-36S**					29	44.5			32
	1/2	**KQ2K11-37S**					33	46.5			58
1/2	1/4	**KQ2K13-35S**	17.46	21.7	17	25.5	27.5	46.5	22	8	27
	3/8	**KQ2K13-36S**					29.5	48		9.6	35
	1/2	**KQ2K13-37S**	22.23				33.5	50			61

* Reference dimensions after NPT thread installation.
Note) øD1: Max. diameter

<10-32 UNF>

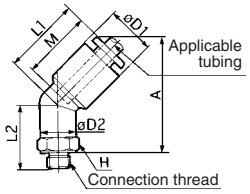

<NPT>

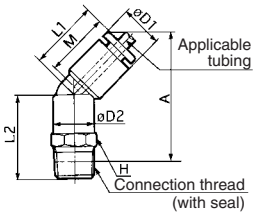

Universal Male Elbow: KQ2V

<10-32 UNF>

<NPT>

Applicable tubing O.D. (inch)	Connection thread UNF NPT	Model	H (Width across flats)	Note) øD1	øD2	L1	L2	L3	A *	M	Min. port size	Weight (g)
1/8	10-32 UNF	**KQ2V01-32**	8	8.4	9.8	17.2	11	18.5	15	12.7	2.3	5
	1/8	**KQ2V01-34S**		9.6	13.4	21.5	14.5	26.5	22.5	15.5	2.5	14
5/32	10-32 UNF	**KQ2V03-32**	8	10.4	9.8	20.5	11	18.5	15	16	2.3	6
	1/8	**KQ2V03-34S**			13.4	22	14.5	26.5	22.5		2.8	14
3/16	1/8	**KQ2V05-34S**	8	11.4	13.4	23	14.5	26.5	22.5	16.5	3.5	15
1/4	10-32 UNF	**KQ2V07-32**	8	13.2	13.4	24	12	24	20.5	17	2.3	13
	1/8	**KQ2V07-34S**					14.5	26.5	22.5		4.6	15
	1/4	**KQ2V07-35S**			15.3	23.5	19	32.5	26.5			25
5/16	1/8	**KQ2V09-34S**	11.11	15.2	17.6	28.5	15.5	28.5	24.5	18.5	6	24
	1/4	**KQ2V09-35S**					18.5	31.5	25.5			30
	3/8	**KQ2V09-36S**	12.7		20.6	27.5	20.5	36.5	30			46
3/8	1/4	**KQ2V11-35S**	12.7	17.9	20.6	30.5	19.5	35.5	29.5	21	7	40
	3/8	**KQ2V11-36S**					20.5	36.5	30			48
1/2	3/8	**KQ2V13-36S**	17.46	21.7	27	35.5	21.5	36	30	22	9	68
	1/2	**KQ2V13-37S**					24.5	39	31			85

* Reference dimensions after NPT thread installation.
Note) øD1: Max. diameter

<10-32 UNF>

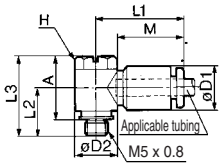

<NPT>

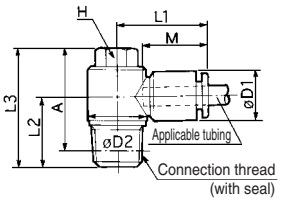

Hexagon Socket Head Universal Male Elbow: KQ2VS

<10-32 UNF>

<NPT>

Applicable tubing O.D. (inch)	Connection thread UNF NPT	Model	H (Width across flats)	Note) øD1	øD2	L1	L2	L3	A *	M	Min. port size	Weight (g)
1/8	10-32 UNF	**KQ2VS01-32**	4	8.4	9.8	17.2	10.9	18.5	15	12.7	2.3	5
	1/8	**KQ2VS01-34S**	6.35	9.6	13.4	21.5	14.5	26.5	22.5	15.5	2.5	14
5/32	10-32 UNF	**KQ2VS03-32**	4	10.4	9.8	20.5	11	18.5	15	16	2.3	6
	1/8	**KQ2VS03-34S**	6.35		13.4	22	14.5	26.5	22.5		2.8	14
3/16	1/8	**KQ2VS05-34S**	8	11.4	13.4	23	14.5	26.5	22.5	16.5	3.5	15
1/4	10-32 UNF	**KQ2VS07-32**	6.35	13.2	13.4	24	12	24	19	17	2.3	13
	1/8	**KQ2VS07-34S**					14.5	26.5	22.5		4.6	15
	1/4	**KQ2VS07-35S**			15.3	23.5	19	28.5				22
5/16	1/8	**KQ2VS09-34S**	8	15.2	17.6	28.5	15.5	27	23	18.5	6	21
	1/4	**KQ2VS09-35S**					18.5	30	24			27
	3/8	**KQ2VS09-36S**			20.6	27.5	20.5	32.5	26			39
3/8	1/4	**KQ2VS11-35S**	8	17.9	20.6	31	19.5	31.5	25.5	21	7	33
	3/8	**KQ2VS11-36S**					20.5	32.5	26			42
1/2	3/8	**KQ2VS13-36S**	9.53	21.7	27	34.5	21.5	34.5	28.5	22	9	63
	1/2	**KQ2VS13-37S**					24.5	37.5	29.5			81

* Reference dimensions after NPT thread installation.
Note) øD1: Max. diameter

<10-32 UNF>

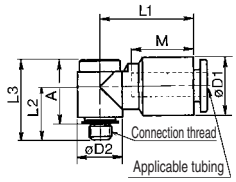

<NPT>

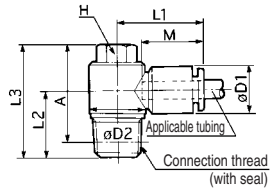

Universal Female Elbow: KQ2VF

<10-32 UNF>

<NPT>

Applicable tubing O.D. (inch)	Connection thread UNF NPT	Model	H (Width across flats)	Note) øD1	øD2	L1	L2	L3	A *	M	Min. port size	Weight (g)
1/8	10-32 UNF	KQ2VF01-32	8	8.4	9.8	17.2	10	20	16.5	12.7	2.3	5
	1/8	KQ2VF01-34S	14.29	9.6	13.4	21.5	14	29.5	25.5	15.5	2.5	18
5/32	10-32 UNF	KQ2VF03-32	8	10.4	9.8	20.5	11	20	16	16	2.5	6
	1/8	KQ2VF03-34S	14.29		13.4	22	15.5	29.5	25.5		2.8	18
3/16	1/8	KQ2VF05-34S	14.29	11.4	13.4	23	14	29.5	25.5	16.5	3.5	19
1/4	10-32 UNF	KQ2VF07-32	14.29	13.2	13.4	24	11.5	27	23.5	17	2.3	16
	1/8	KQ2VF07-34S					14	29.5	25.5		4.6	19
	1/4	KQ2VF07-35S	17.46		17.6	25	17.5	38.5	32.5			37
5/16	1/8	KQ2VF09-34S	17.46	15.2	17.6	28.5	17	31	27	18.5	6	30
	1/4	KQ2VF09-35S					20	38.5	32.5			38
	3/8	KQ2VF09-36S	22.23		25.2	29.5	20.5	45	39			67
3/8	1/4	KQ2VF11-35S	22.23	17.9	20.6	31	17.5	41	35	21	7	60
	3/8	KQ2VF11-36S			25.2	31.5	19.5	45	39			70
1/2	3/8	KQ2VF13-36S	22.23	21.7	27	35.5	21	42	39	22	9	85
	1/2	KQ2VF13-37S	25.4				24	50	41.5			104

* Reference dimensions after NPT thread installation.
Note) øD1: Max. diameter

<10-32 UNF>

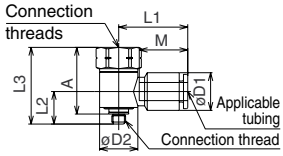

<NPT>

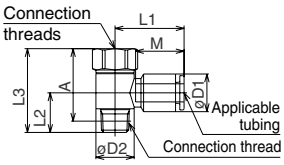

Female Elbow: KQ2LF

Applicable tubing O.D. (inch)	Connection thread UNF NPT	Model	H (Width across flats)	Note) øD1	øD2	L1	L2	M	Min. port size	Weight (g)
1/8	1/8	KQ2LF01-34	14.29	9.6	10	17.5	20	15.5	2.5	12
	1/4	KQ2LF01-35	17.46				23.5			20
5/32	1/8	KQ2LF03-34	14.29	10.4	10	18	20.5	16	3	12
	1/4	KQ2LF03-35	17.46				24			20
1/4	1/8	KQ2LF07-34	14.29	13.2	10	20.5	22	17	4.6	13
	1/4	KQ2LF07-35	17.46				25.5			21
	3/8	KQ2LF07-36	22.23				26			33
3/8	1/4	KQ2LF11-35	17.46	17.9	17	25.5	27.5	21	7	28
	3/8	KQ2LF11-36	22.23				28			40
	1/2	KQ2LF11-37	23.81				32			45
1/2	3/8	KQ2LF13-36	22.23	21.7	17	28	30	22	9.6	44
	1/2	KQ2LF13-37	23.81				34			49

* Reference dimensions after NPT thread installation.
Note) øD1: Max. diameter

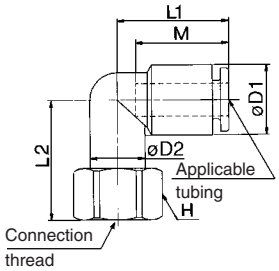

Double Universal Male Elbow: KQ2VD

<10-32 UNF>

<NPT>

Applicable tubing O.D. (inch)	Connection thread UNF NPT	Model	H (Width across flats)	Note) øD1	øD2	L1	L2	L3	A *	M	Min. port size	Weight (g)
1/8	10-32 UNF	KQ2VD01-32	8	8.4	9.8	17.2	10	20	16.5	12.7	2.3	5
	1/8	KQ2VD01-34S	14.29	9.6	13.4	21.5	14	29.5	25.5	15.5	2.5	18
5/32	10-32 UNF	KQ2VD03-32	8	10.4	9.8	20.5	11	20	16	16	2.5	6
	1/8	KQ2VD03-34S	14.29		13.4	22	15.5	29.5	25.5		2.8	18
3/16	1/8	KQ2VD05-34S	14.29	11.4	13.4	23	14	29.5	25.5	16.5	3.5	19
1/4	10-32 UNF	KQ2VD07-32	14.29	13.2	13.4	24	11.5	27	23.5	17	2.3	16
	1/8	KQ2VD07-34S					14	29.5	25.5		4.6	19
	1/4	KQ2VD07-35S	17.46		17.6	25	17.5	38.5	32.5			37
5/16	1/8	KQ2VD09-34S	17.46	15.2	17.6	28.5	17	31	27	18.5	6	30
	1/4	KQ2VD09-35S					20	38.5	32.5			38
	3/8	KQ2VD09-36S	22.23		25.2	29.5	20.5	45	39			67
3/8	1/4	KQ2VD11-35S	22.23	17.9	20.6	31	17.5	41	35	21	7	60
	3/8	KQ2VD11-36S			25.2	31.5	19.5	45	39			70
1/2	3/8	KQ2VD13-36S	22.23	21.7	27	35.5	21	42	39	22	9	85
	1/2	KQ2VD13-37S	25.4				24	50	41.5			104

* Reference dimensions after NPT thread installation.
Note) øD1: Max. diameter

<10-32 UNF>

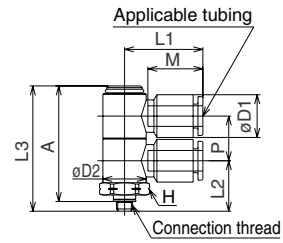

<NPT>

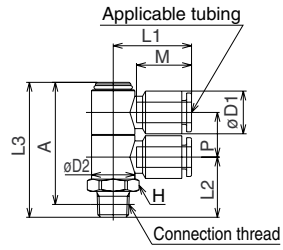

Triple Universal Male Elbow: KQ2VT

<10-32 UNF>

<NPT>

Applicable tubing O.D. (inch)	Connection thread UNF NPT	Model	H (Width across flats)	Note) øD1	øD2	L1	L2	L3	A *	M	P	Min. port size	Weight (g)
1/8	10-32 UNF	**KQ2VT01-32**	14.29	9.6	13.4	22	15.5	52	48.5	15.5	13.4	2.3	32
	1/8	**KQ2VT01-34S**					18	54.5	50.5			2.5	30
5/32	10-32 UNF	**KQ2VT03-32**	14.29	10.4	13.4	22	15.5	52	48.5	16	13.4	2.3	32
	1/8	**KQ2VT03-34S**					18.5	54.5	50.5			3	29
3/16	1/8	**KQ2VT05-34S**	14.29	11.4	13.4	23	18	54.5	50.5	16.5	13.4	3.5	31
1/4	10-32 UNF	**KQ2VT07-32**	14.29	13.2	13.4	24	15.5	53	49.5	17	13.8	4.6	35
	1/8	**KQ2VT07-34S**					18.5	55.5	51.5				33
	1/4	**KQ2VT07-35S**					21.5	58.5	52.5				39
	3/8	**KQ2VT07-36S**	17.46				23.5	60.5	54				52
5/16	1/8	**KQ2VT09-35S**	19	15.2	17.6	28.5	24	67	61	18.5	15.9	6	59
	1/4	**KQ2VT09-36S**					25	68	61.5				70
	3/8	**KQ2VT09-37S**	22.23				28.5	71.5	63.5				94
3/8	1/4	**KQ2VT11-35S**	22.23	17.9	20.6	31	26	77.5	71.5	21	19.2	7	98
	3/8	**KQ2VT11-36S**					27	78.5	72				98
	1/2	**KQ2VT11-37S**					30	81.5	73				114
1/2	3/8	**KQ2VT13-36S**	25.4	21.7	27	35.5	32	89	83	22	22.3	9.6	188
	1/2	**KQ2VT13-37S**					35	92	84				203

∗ Reference dimensions after NPT thread installation.
Note) øD1: Max. diameter

<10-32 UNF>

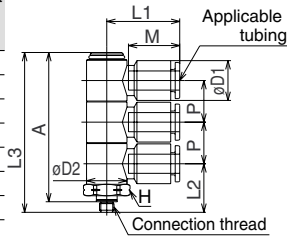

<NPT>

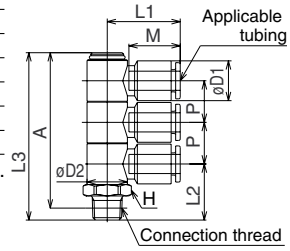

Branch Universal Male Elbow: KQ2Z

<10-32 UNF>

<NPT>

Applicable tubing O.D. (inch)	Connection thread UNF NPT	Model	H (Width across flats)	Note) øD1	øD2	L1	L2	L3	A *	M	P	Min. port size	Weight (g)
1/8	10-32 UNF	**KQ2Z01-32**	8	8.4	9.8	16	11.2	18.5	15	12.7	8.4	2.3	6
	1/8	**KQ2Z01-34S**		9.6	13.4	20.5	14.5	26.5	22.5	15.5	9.6	2.5	16
5/32	10-32 UNF	**KQ2Z03-32**	8	10.4	9.8	19.5	11	18.5	15	16	10.4	2.3	8
	1/8	**KQ2Z03-34S**			13.4	21	14.5	26.5	22.5			2.8	16
3/16	1/8	**KQ2Z05-34S**	8	11.4	13.4	21.5	14.5	26.5	22.5	16.5	11.4	3.5	17
1/4	10-32 UNF	**KQ2Z07-32**	8	13.2	13.4	21.5	12	24	20.5	17	13.2	2.3	15
	1/8	**KQ2Z07-34S**					14.5	26.5	22.5			4.6	17
	1/4	**KQ2Z07-35S**	11.11	15.2	17.6	26	18.5	31.5	25.5				33
5/16	1/8	**KQ2Z09-34S**	11.11	15.2	17.6	26	15.5	28.5	24.5	18.5	15.2	6	27
	1/4	**KQ2Z09-35S**					18.5	31.5	25.5				33
	3/8	**KQ2Z09-36S**	12.7		20.6	27	20.5	36.5	30				49
3/8	1/4	**KQ2Z11-35S**	12.7	17.9	20.6	28.5	19.5	35.5	29.5	21	17.9	7	46
	3/8	**KQ2Z11-36S**					20.5	36.5	30				55
1/2	3/8	**KQ2Z13-36S**	17.46	21.7	27	33	21.5	36	30	22	21.7	9	76
	1/2	**KQ2Z13-37S**					24.5	39	31				93

∗ Reference dimensions after NPT thread installation.
Note) øD1: Max. diameter

<10-32 UNF>

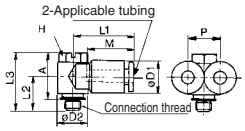

<NPT>

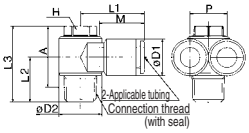

Double Branch Universal Male Elbow: KQ2ZD

Applicable tubing O.D. (inch)	Connection thread UNF NPT	Model	H (Width across flats)	Note) øD1	øD2	L1	L2	L3	A *	M	P1	P2	Min. port size	Weight (g)
1/8	1/8	**KQ2ZD01-34S**	14.29	9.6	13.4	20.5	18	41	37	15.5	13.4	9.6	2.5	26
5/32	1/8	**KQ2ZD03-34S**	14.29	10.4	13.4	21	18.5	41	37	16	13.4	10.4	3	26
3/16	1/8	**KQ2ZD05-34S**	14.29	11.4	13.4	21.5	18	41	37	16.5	13.4	11.4	3.5	29
1/4	1/8	**KQ2ZD07-34S**	14.29	13.2	13.4	21.5	18.5	41.5	37.5	17	13.8	13.2	4.6	30
	1/4	**KQ2ZD07-35S**					21.5	44.5	38.5					36
	3/8	**KQ2ZD07-36S**	17.46				23.5	46.5	40.5					49
5/16	1/8	**KQ2ZD09-35S**	19	15.2	17.6	26	24	51	45	18.5	15.9	15.2	6	56
	1/4	**KQ2ZD09-36S**					25	52	45.5					64
	3/8	**KQ2ZD09-37S**	22.23				28.5	55.5	47.5					88
3/8	1/4	**KQ2ZD11-35S**	22.23	17.9	20.6	28.5	26	58	52	21	19.2	17.9	7	88
	3/8	**KQ2ZD11-36S**					27	59	52.5					90
	1/2	**KQ2ZD11-37S**					30	62	54					106
1/2	3/8	**KQ2ZD13-36S**	25.4	21.7	27	33	32	66.5	60.5	22	22.3	21.7	9.6	158
	1/2	**KQ2ZD13-37S**					35	69.5	61.5					176

∗ Reference dimensions after NPT thread installation.
Note) øD1: Max. diameter

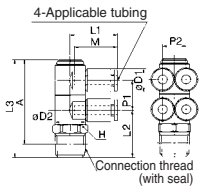

Triple Branch Universal Male Elbow: KQ2ZT

Applicable tubing O.D. (inch)	Connection thread UNF NPT	Model	H (Width across flats)	Note) øD1	øD2	L1	L2	L3	A *	M	P1	P2	Min. port size	Weight (g)
1/8	1/8	**KQ2ZT01-34S**	14.29	9.6	13.4	20.5	18	54.5	50.5	15.5	13.4	9.6	2.5	34
5/32	1/8	**KQ2ZT03-34S**	14.29	10.4	13.4	21	18.5	54.5	50.5	16	13.4	10.4	3	34
3/16	1/8	**KQ2ZT05-34S**	14.29	11.4	13.4	21.5	18	54.5	50.5	16.5	13.4	11.4	3.5	38
1/4	1/8	**KQ2ZT07-34S**	14.29	13.2	13.4	21.5	18.5	55.5	51.5	17	13.8	13.2	4.6	40
	1/4	**KQ2ZT07-35S**					21.5	58.5	52.5					46
	3/8	**KQ2ZT07-36S**	17.46				23.5	60.5	54					59
5/16	1/8	**KQ2ZT09-35S**	19	15.2	17.6	26	24	67	61	18.5	15.9	15.2	6	70
	1/4	**KQ2ZT09-36S**					25	68	61.5					80
	3/8	**KQ2ZT09-37S**	22.23				28.5	71.5	63.5					104
3/8	1/4	**KQ2ZT11-35S**	22.23	17.9	20.6	28.5	26	77.5	71.5	21	19.2	17.9	7	116
	3/8	**KQ2ZT11-36S**					27	78.5	72					116
	1/2	**KQ2ZT11-37S**					30	81.5	73					132
1/2	3/8	**KQ2ZT13-36S**	25.4	21.7	27	33	32	89	83	22	22.3	21.7	9.6	213
	1/2	**KQ2ZT13-37S**					35	92	84					228

* Reference dimensions after NPT thread installation.
Note) øD1: Max. diameter

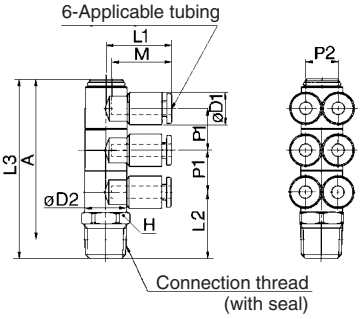

Union Elbow: KQ2L

Applicable tubing O.D. (inch)	Model	Note) øD	L	Q	M	Min. port size	Weight (g)
1/8	**KQ2L01-00**	9.6	17.5	4.3	15.5	2.5	3
5/32	**KQ2L03-00**	10.4	18	4.5	16	3	4
3/16	**KQ2L05-00**	11.4	19.5	4.8	16.5	3.5	5
1/4	**KQ2L07-00**	13.2	20.5	5.3	17	4.6	5
5/16	**KQ2L09-00**	15.2	23	6	18.5	6	7
3/8	**KQ2L11-00**	17.9	26	6.6	21	7	13
1/2	**KQ2L13-00**	21.7	29	7.8	22	9.6	18

Note) øD: Max. diameter

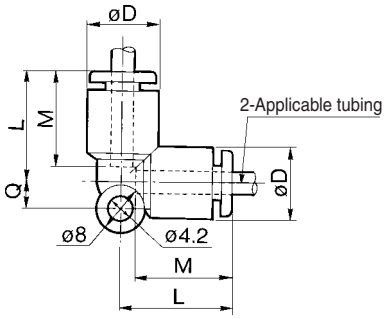

Plug-in Elbow: KQ2L

Applicable tubing O.D. (inch)	Applicable fitting size **ød** (inch)	Model	Note) øD1	øD2	L1	L2	A	M	Min. port size	Weight (g)
1/8	1/8	**KQ2L01-99**	9.6	7	17	24.5	14	15	2.2	3
5/32	5/32	**KQ2L03-99**	10.4	8	18	25	14.5	16	2.5	3
3/16	3/16	**KQ2L05-99**	11.4	10	19.5	34	23.5	16.5	3.5	7
1/4	1/4	**KQ2L07-99**	13.2	10	20	27.5	17.5	17	4.6	8
5/16	5/16	**KQ2L09-99**	15.2	12	22.5	31.5	21	18.5	6	6
3/8	3/8	**KQ2L11-99**	17.9	13.6	25	35	23	21	7	19
1/2	1/2	**KQ2L13-99**	21.7	17	28	44.5	34	22	9.6	27

Note) øD1: Max. diameter

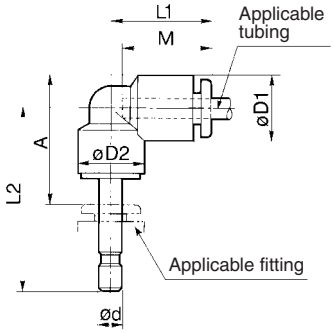

Reducer Elbow: KQ2L

Applicable tubing O.D. (inch)	Applicable fitting size **ød** (inch)	Model	Note) øD1	øD2	L1	L2	A	M	Min. port size	Weight (g)
1/8	5/32	**KQ2L01-03**	9.6	7	17	25	13.5	15.5	2.2	3
	3/16	**KQ2L01-05**		10	17.5	33	21.5		2.5	7
5/32	3/16	**KQ2L03-05**	10.4	10	18	33.5	22.5	16	3	6
	1/4	**KQ2L03-07**		8		26	14.5		2.5	3
3/16	1/4	**KQ2L05-07**	11.4	10	19	26.5	15.5	16.5	3.5	8
	5/16	**KQ2L05-09**			19.5	35.5	23			11
1/4	5/16	**KQ2L07-09**	13.2	10	20.5	36.5	24.5	17	4.6	12
	3/8	**KQ2L07-11**				39.5	23.5			17
5/16	3/8	**KQ2L09-11**	15.2	12	23.5	40.5	27.5	18.5	6	17
	1/2	**KQ2L09-13**				41.5				30
3/8	1/2	**KQ2L11-13**	17.9	17	25.5	43	30	21	7	25

Note) øD1: Max. diameter

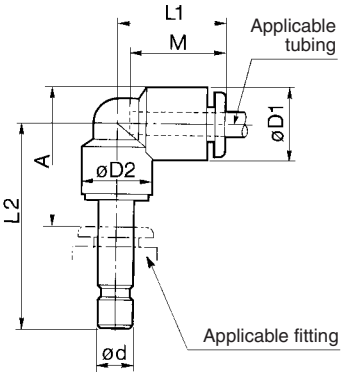

Extended Male Elbow: KQ2W

Applicable tubing O.D. (inch)	Connection thread NPT	Model	H (Width across flats)	Note) øD1	øD2	L1	L2	A *	M	Min. port size	Weight (g)
1/8	1/8	**KQ2W01-34S**	11.11	9.6	10	17.5	37	38	15.5	2.5	19
	1/4	**KQ2W01-35S**	14.29				43	42			41
5/32	1/8	**KQ2W03-34S**	11.11	10.4	10	18	37.5	38.5	16	3	19
	1/4	**KQ2W03-35S**	14.29				43.5	42.5			41
3/16	1/8	**KQ2W05-34S**	11.11	11.4	10	19.5	38	40	16.5	3.5	41
	1/4	**KQ2W05-35S**	14.29				44	43.5			19
1/4	1/8	**KQ2W07-34S**	11.11	13.2	10	20.5	40.5	43	17	4.6	20
	1/4	**KQ2W07-35S**	14.29				46.5	47			42
	3/8	**KQ2W07-36S**	17.46				48.5	49			69
5/16	1/8	**KQ2W09-34S**	12.7	15.2	12	23.5	43.5	47	18.5	6	30
	1/4	**KQ2W09-35S**	14.29				49.5	51			47
	3/8	**KQ2W09-36S**	17.46				51.5	53			74
3/8	1/4	**KQ2W11-35S**	17.46	17.9	17	25.5	56	59	21	7	69
	3/8	**KQ2W11-36S**					58	61			76
	1/2	**KQ2W11-37S**	22.23				64.5	65.5			147
1/2	1/4	**KQ2W13-35S**	17.46	21.7	17	28	58	63	22	9	72
	3/8	**KQ2W13-36S**					60	64.5		9.6	78
	1/2	**KQ2W13-37S**	22.23				66.5	69			149

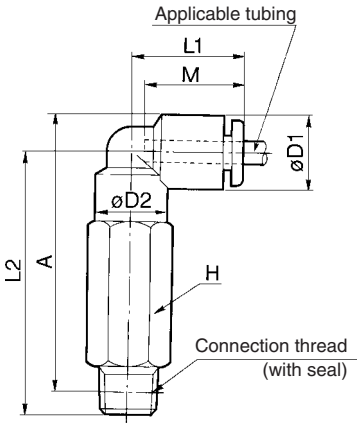

* Reference dimensions after NPT thread installation.
Note) øD1: Max. diameter

Male Branch Tee: KQ2T

<10-32 UNF>

<NPT>

Applicable tubing O.D. (inch)	Connection thread UNF NPT	Model	H (Width across flats)	Note) øD1	øD2	L1	L2	A	M	Min. port size	Weight (g)
1/8	10-32 UNF	**KQ2T01-32**	7	8.4	—	15.3	13.2	14.4	12.7	2.3	3.2
	1/16	**KQ2T01-33S**	11.11	9.6	10	17.5	21.5	22.5 *	15.5	2.5	10
	1/8	**KQ2T01-34S**									
	1/4	**KQ2T01-35S**	14.29				25.5	24.5 *			20
5/32	10-32 UNF	**KQ2T03-32**	7	9.3	—	15.6	13.7	15.4	12.7	2.3	3.5
	1/16	**KQ2T03-33S**	11.11	10.4	10	18	22	23 *	16	3	10
	1/8	**KQ2T03-34S**									11
	1/4	**KQ2T03-35S**	14.29				26	25 *			20
3/16	1/8	**KQ2T05-34S**	11.11	11.4	10	19.5	22.5	24 *	16.5	3.5	12
	1/4	**KQ2T05-35S**	14.29				26.5	26 *			21
1/4	10-32 UNF	**KQ2T07-32**	7	12	—	16.1	15.1	18.1	13.6	2.3	4.4
	1/8	**KQ2T07-34S**	11.11	13.2	10	20.5	23.5	26 *	17	4.6	11
	1/4	**KQ2T07-35S**	14.29				27.5	28 *			21
	3/8	**KQ2T07-36S**	17.46				29.5	30 *			34
5/16	1/8	**KQ2T09-34S**	12.7	15.2	12	23	24.5	28 *	18.5	6	15
	1/4	**KQ2T09-35S**	14.29				28.5	30 *			23
	3/8	**KQ2T09-36S**	17.46				30.5	31.5 *			35
3/8	1/8	**KQ2T11-34S**	17.46	17.9	17	25.5	26.5	31.5 *	21	6	31
	1/4	**KQ2T11-35S**					29.5	32.5 *		7	29
	3/8	**KQ2T11-36S**					31.5	34.5 *			38
	1/2	**KQ2T11-37S**	22.23				35.5	36.5 *			64
1/2	1/4	**KQ2T13-35S**	17.46	21.7	17	28	31.5	36.5 *	22	9	34
	3/8	**KQ2T13-36S**					33.5	38.5 *		9.6	43
	1/2	**KQ2T13-37S**	22.23				37.5	40 *			69

<10-32 UNF>

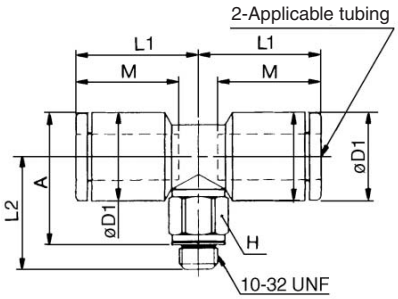

<NPT>

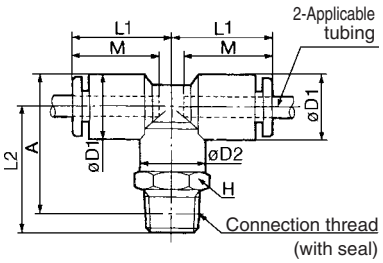

* Reference dimensions after NPT thread installation.
Note) øD1:Max. diameter

Union Tee: KQ2T

Applicable tubing O.D. (inch)	Model	Note) øD	L	Q	M	Min. port size	Weight (g)
1/8	**KQ2T01-00**	9.6	17.5	4.3	15.5	2.5	5
5/32	**KQ2T03-00**	10.4	18	4.5	16	3	4
3/16	**KQ2T05-00**	11.4	19.5	4.8	16.5	3.5	7
1/4	**KQ2T07-00**	13.2	20.5	5.3	17	4.6	8
5/16	**KQ2T09-00**	15.2	23	6	18.5	6	11
3/8	**KQ2T11-00**	17.9	26	6.6	21	7	18
1/2	**KQ2T13-00**	21.7	29	7.8	22	9.6	26

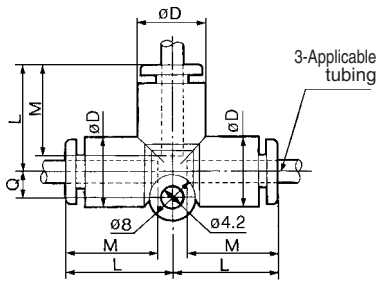

Note) øD: Max. diameter

Different Diameter Tee: KQ2T

Applicable tubing O.D. (inch) ⓐ	Applicable tubing O.D. (inch) ⓑ	Model	Note) øD	L	Q	M1	M2	Min. port size	Weight (g)
1/8	5/32	**KQ2T01-03**	10.4	18	4.5	16	15.5	2.5	5
	1/4	**KQ2T01-07**	13.2	20.5	5.3	17			8
5/32	3/16	**KQ2T03-05**	11.4	19.5	4.8	16.5	16	3	6
	1/4	**KQ2T03-07**	13.2	20.5	5.3	17			8
3/16	1/4	**KQ2T05-07**	13.2	20.5	5.3	17	16.5	3.5	8
1/4	5/16	**KQ2T07-09**	15.2	23	6	18.5	17	4.6	11
	3/8	**KQ2T07-11**	17.9	26	6.6	21			17
5/16	3/8	**KQ2T09-11**	17.9	26	6.6	21	18.5	6	17
	1/2	**KQ2T09-13**	21.7	29	7.8	22			26
3/8	1/2	**KQ2T11-13**	21.7	29	7.8	22	21	7	28

Note) øD: Max. diameter

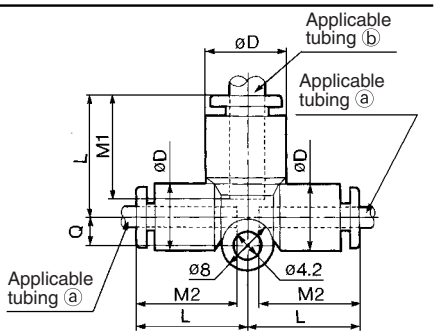

Cross: KQ2TW

Applicable tubing O.D. (inch)	Model	Note) øD	L	Q	M	Min. port size	Weight (g)
5/32	**KQ2TW03-00**	10.4	18	8.7	16	3	6
1/4	**KQ2TW07-00**	13.2	20.5	10.1	17	4.6	10
5/16	**KQ2TW09-00**	15.2	23	11.1	18.5	6	14
3/8	**KQ2TW11-00**	17.9	26	12.5	21	7	25
1/2	**KQ2TW13-00**	21.7	29	14.4	22	9.6	36

Note) øD: Max. diameter

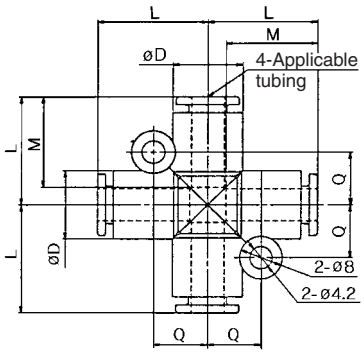

Male Run Tee: KQ2Y

Applicable tubing O.D. (inch)	Connection thread NPT	Model	H (Width across flats)	Note) øD1	øD2	L1	L2	A *	M	Min. port size	Weight (g)
1/8	1/16	**KQ2Y01-33S**	11.11	9.6	10	17.5	21.5	35	15.5	2.5	10
	1/8	**KQ2Y01-34S**									
	1/4	**KQ2Y01-35S**	14.29				25.5	37			20
5/32	1/16	**KQ2Y03-33S**	11.11	10.4	10	18	22	36	16	3	10
	1/8	**KQ2Y03-34S**									11
	1/4	**KQ2Y03-35S**	14.29				26	38			20
3/16	1/8	**KQ2Y05-34S**	11.11	11.4	10	19.5	22.5	38	16.5	3.5	12
	1/4	**KQ2Y05-35S**	14.29				26.5	40			21
1/4	1/8	**KQ2Y07-34S**	11.11	13.2	10	20.5	23.5	40	17	4.6	11
	1/4	**KQ2Y07-35S**	14.29				27.5	42			21
	3/8	**KQ2Y07-36S**	17.46				29.5	44			34
5/16	1/8	**KQ2Y09-34S**	12.7	15.2	12	23.5	24.5	44	18.5	6	15
	1/4	**KQ2Y09-35S**	14.29				28.5	46			23
	3/8	**KQ2Y09-36S**	17.46				30.5	48			35
3/8	1/4	**KQ2Y11-35S**	17.46	17.9	17	25.5	29.5	49	21	7	29
	3/8	**KQ2Y11-36S**					31.5	51			38
	1/2	**KQ2Y11-37S**	22.23				35.5	53			64
1/2	1/4	**KQ2Y13-35S**	17.46	21.7	17	28	31.5	53.5	22	9	34
	3/8	**KQ2Y13-36S**					33.5	55.5		9.6	43
	1/2	**KQ2Y13-37S**	22.23				37.5	57			69

* Reference dimensions after NPT thread installation.
Note) øD1: Max. diameter

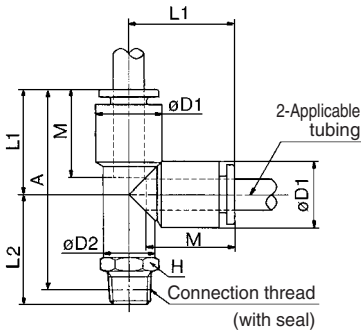

Branch "Y": KQ2U

Applicable tubing O.D. (inch)	Connection thread NPT	Model	H (Width across flats)	Note) øD	L	P	Q	A *	M	Min. port size	Weight (g)
1/8	1/8	**KQ2U01-34S**	12.7	9.6	40.5	9.6	9	36.5	15.5	2.5	14
	1/4	**KQ2U01-35S**	14.29		44.5			38.5			
5/32	1/8	**KQ2U03-34S**	12.7	10.4	42	10.4	9.7	38	16	3	16
	1/4	**KQ2U03-35S**	14.29		46			40			
3/16	1/8	**KQ2U05-34S**	12.7	11.4	44	11.4	10.6	40	16.5	3.5	18
	1/4	**KQ2U05-35S**	14.9		48.5			42.5			
1/4	1/8	**KQ2U07-34S**	14.29	13.2	46.5	13.2	12	42.5	17	4.6	19
	1/4	**KQ2U07-35S**			49.5			43.5			
	3/8	**KQ2U07-36S**	17.46		51.5			45			
5/16	1/8	**KQ2U09-34S**	17.46	15.2	52.5	15.2	13.7	48.5	18.5	6	21
	1/4	**KQ2U09-35S**			55.5			49.5			22
	3/8	**KQ2U09-36S**			56.5			50			35
3/8	1/4	**KQ2U11-35S**	19.05	17.9	60	17.9	15.6	54	21	7	42
	3/8	**KQ2U11-36S**			61			54.5			43
	1/2	**KQ2U11-37S**	22.23		64.5			56.5			56
1/2	1/4	**KQ2U13-35S**	22.23	21.7	64.5	21.7	18.8	58.5	22	9.6	31
	3/8	**KQ2U13-36S**			65.5			59			41
	1/2	**KQ2U13-37S**			68.5			60.5			68

* Reference dimensions after NPT thread installation.
Note) øD: Max. diameter

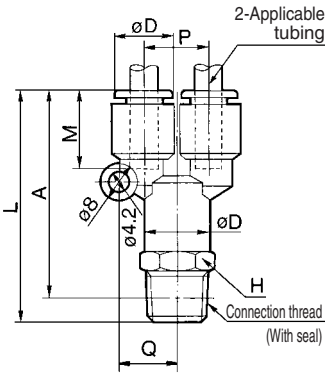

Union "Y": KQ2U

Applicable tubing O.D. (inch)	Model	Note) øD	L1	L2	P	Q	M	Min. port size	Weight (g)
1/8	**KQ2U01-00**	9.6	33	17.5	9.6	9	15.5	2.5	6
5/32	**KQ2U03-00**	10.4	34	18	10.4	9.7	16	3	7
3/16	**KQ2U05-00**	11.4	36.5	20.5	11.4	10.6	16.5	3.5	9
1/4	**KQ2U07-00**	13.2	38	21.5	13.2	12	17	4.6	9
5/16	**KQ2U09-00**	15.2	42.5	24.5	15.2	13.7	18.5	6	11
3/8	**KQ2U11-00**	17.9	48	27.5	17.9	15.6	21	7	16

Note) øD: Max. diameter

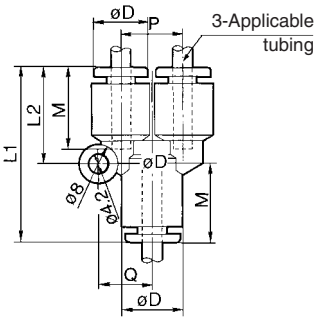

Branch "Y": KQ2U

Applicable tubing O.D. (inch) ⓐ	Applicable tubing O.D. (inch) ⓑ	Model	Note) øD	L1	L2	P	Q	M1	M2	Min. port size	Weight (g)
1/8	5/32	**KQ2U01-03**	10.4	18	18	10.4	9.7	15.5	16	2.5	5
	1/4	**KQ2U01-07**	13.2	38	21.5	13.2	12		17		9
5/32	3/16	**KQ2U03-05**	11.4	36.5	20.5	11.4	10.6	16	16.5	3	8
	1/4	**KQ2U03-07**	13.2	38	21.5	13.2	12		17		10
3/16	1/4	**KQ2U05-07**	13.2	38	21.5	13.2	12	16.5	17	3.5	9
1/4	5/16	**KQ2U07-09**	15.2	42.5	24.5	15.2	13.7	17	18.5	4.6	12
	3/8	**KQ2U07-11**	17.9	47	27.5	17.9	15.6		21		23
5/16	3/8	**KQ2U09-11**	17.9	47	27.5	17.9	15.6	18.5	21	6	22
	1/2	**KQ2U09-13**	21.7	51	30	21.7	18.8		22		34
3/8	1/2	**KQ2U11-13**	21.7	51.5	30.5	21.7	18.8	21	22	7	36

Note) øD: Max. diameter

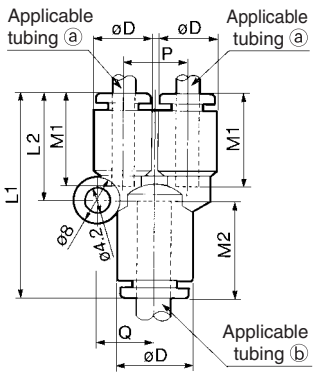

Plug-in "Y": KQ2U

Applicable tubing O.D. (inch)	Applicable fitting size ød (inch)	Model	Note) øD	L1	L2	P	Q	A	M	Min. port size	Weight (g)
1/8	1/8	**KQ2U01-99**	9.6	50	17.5	9.6	9	35	15.5	2	10
5/32	5/32	**KQ2U03-99**	10.4	51.5	18	10.4	9.7	35.5	16	2.5	12
3/16	3/16	**KQ2U05-99**	11.4	56	20.5	11.4	10.6	39.5	16.5	3.5	17
1/4	1/4	**KQ2U07-99**	13.2	56.5	21.5	13.2	12	39.5	17	4.6	18
5/16	5/16	**KQ2U09-99**	15.2	64.5	24.5	15.2	13.7	46	18.5	6	21

Note) øD: Max. diameter

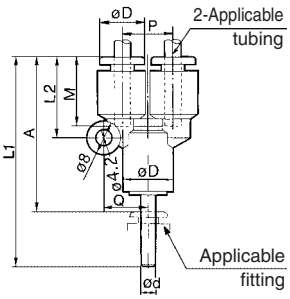

Different Diameter Plug-in "Y": KQ2X

Applicable tubing O.D. (inch)	Applicable fitting size **ød**	Model	Note) **øD**	**L1**	**L2**	**A**	**P**	**Q**	**M**	Min. port size	Weight (g)
1/8	5/32	**KQ2X01-03**	10.4	51.5	18	35.5	10.4	9.7	15.5	2.5	5
5/32	3/16	**KQ2X03-05**	11.4	56	20.5	39.5	11.4	10.6	16	3.5	10
3/16	1/4	**KQ2X05-07**	13.2	56.5	21.5	39.5	13.2	12	16.5	4.6	9
1/4	5/16	**KQ2X07-09**	15.2	64.5	24.5	46	15.2	13.7	17	6	21

Note) øD: Max. diameter

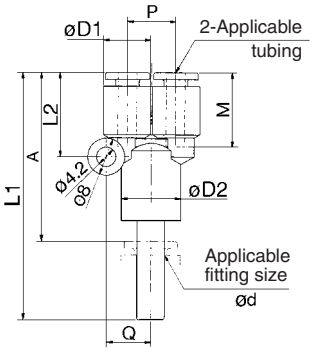

Plug-in Reducer: KQ2R

Applicable tubing O.D. (inch)	Applicable fitting size **ød** (inch)	Model	Note) **øD**	**L**	**A**	**M**	Min. port size	Weight (g)
1/8	5/32	**KQ2R01-03**	9.6	34.5	18.5	15.5	2.5	2
	3/16	**KQ2R01-05**	9.2	34	17.5			7
	1/4	**KQ2R01-07**			17			9
5/32	3/16	**KQ2R03-05**	10	34	17.5	16	3	8
	1/4	**KQ2R03-07**	10.4	34.5				9
3/16	1/4	**KQ2R05-07**	11.4	34.5	18.5	16.5	3.5	4
	5/16	**KQ2R05-09**	10.7	36.5	18			14
1/4	5/16	**KQ2R07-09**	13.2	37	18.5	17	4.6	17
	3/8	**KQ2R07-11**		40	19.5			19
5/16	3/8	**KQ2R09-11**	14	40	19	18.5	6	24
	1/2	**KQ2R09-13**		41				32
3/8	1/2	**KQ2R11-13**	17.9	44	22	21	7	32

Note) øD: Max. diameter

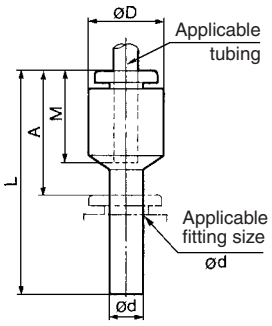

Bulkhead Union: KQ2E

Applicable tubing O.D. (inch)	Model	Connection thread UNF	**H** (Width across flats)	**L**	Mounting hole	**M**	Min. port size	Weight (g)
1/8	**KQ2E01-00**	1/2-20	17.46	32.5	13.5	15.5	2.5	26
5/32	**KQ2E03-00**	1/2-20	17.46	32.5	13.5	16	3	26
3/16	**KQ2E05-00**	9/16-18	17.46	34	15	16.5	3.5	33
1/4	**KQ2E07-00**	9/16-18	17.46	34.5	15	17	4.6	33
5/16	**KQ2E09-00**	3/4-16	22.23	38	20	18.5	6	52
3/8	**KQ2E11-00**	7/8-14	25.4	42.5	23	21	7	70
1/2	**KQ2E13-00**	1-12	28.6	44.5	26	22	9.6	97

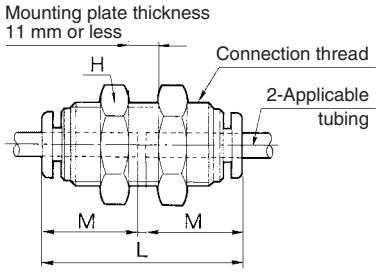

Bulkhead Male Elbow: KQ2LE

Applicable tubing O.D. (inch)	Model	**T**	**H1** (Width across flats)	**H2** (Width across flats)	**B**	**E**	Note) **øD**	Mounting hole	**M**	Min. port size	Weight (g)
1/8	**KQ2LE01-00**	1/2-20 UNF	17.46	17.46	17.5	31	9.6	13.5	15.5	2.5	27
5/32	**KQ2LE03-00**	1/2-20 UNF	17.46	17.46	18	31	10.4	13.5	16	3	26
3/16	**KQ2LE05-00**	9/16-18 UNF	17.46	17.46	19.5	34.5	11.4	15	16.5	3.5	32
1/4	**KQ2LE07-00**	9/16-18 UNF	17.46	17.46	20.5	35	13.2	15	17	4.6	29
5/16	**KQ2LE09-00**	3/4-16 UNF	22.23	22.23	23.5	38.5	15.2	20	18.5	6	53
3/8	**KQ2LE11-00**	7/8-14 UNF	25.4	25.4	25.5	43	17.9	23	21	7	85
1/2	**KQ2LE13-00**	1-12 UNF	28.6	28.6	28	46	21.7	26	22	9.6	105

Note) øD: Max. diameter

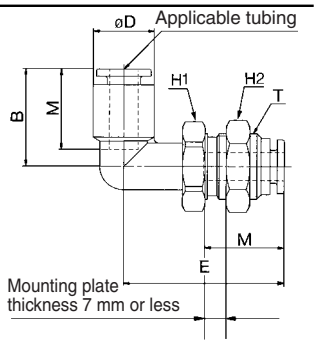

Bulkhead Connector: KQ2E

Applicable tubing O.D. (inch)	Connection thread NPT	Model	Connection thread UNF	H1 (Width across flats)	H2 (Width across flats)	L1	L2	M	Min. port size	Mounting hole	Weight (g)
1/8	1/4	**KQ2E01-35**	1/2 -20	17.46	17.46	31	15	15.5	2.5	13.5	36
5/32	1/4	**KQ2E03-35**	1/2 -20	17.46	17.46	31	15	16	3	13.5	36
3/16	1/8	**KQ2E05-34**	9/16-18	17.46	17.46	28	10	16.5	3.5	15	34
1/4	1/4	**KQ2E07-35**	9/16-18	17.46	17.46	32.5	14.5	17	4.6	15	34
5/16	3/8	**KQ2E09-36**	3/4 -16	22.23	22.23	35	15	18.5	6	20	52
3/8	3/8	**KQ2E11-36**	7/8 -14	25.4	25.4	37	14.5	21	7	23	96
1/2	3/8	**KQ2E13-36**	1-12	28.6	28.6	37	14	22	9.6	26	125
	1/2	**KQ2E13-37**	1-12			41.5	18				128

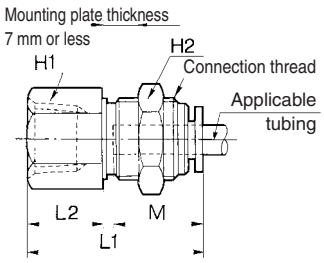

Nipple: KQ2N

Applicable fitting øD	Model	L	M	ød	Weight (g)
1/8	**KQ2N01-99**	36	15.5	2.2	0.2
3/16	**KQ2N05-99**	38	16.5	3.5	0.4
1/4	**KQ2N07-99**	39	17	4.6	1
3/8	**KQ2N11-99**	49	21	7.5	10
1/2	**KQ2N13-99**	51	22	10	15

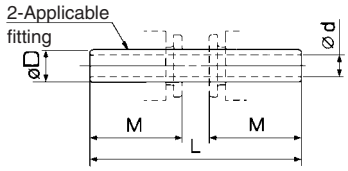

Reducer Nipple: KQ2N

Applicable tubing O.D. (inch) ⓐ	Applicable tubing O.D. (inch) ⓑ	Model	L	M1	M2	ød	Weight (g)
1/8	5/32	**KQ2N01-03**	36.5	16	15.5	2.2	0.2
	3/16	**KQ2N01-05**	37	16.5			0.4
5/32	3/16	**KQ2N03-05**	37.5	16.5	16	2.5	0.4
	1/4	**KQ2N03-07**	38	17			0.6
3/16	1/4	**KQ2N05-07**	38.5	17	16.5	3.5	0.6
	5/16	**KQ2N05-09**	41	18.5			1
1/4	5/16	**KQ2N07-09**	41.5	18.5	17	4.6	1
	3/8	**KQ2N07-11**	45	21			1
5/16	3/8	**KQ2N09-11**	46.5	21	18.5	6	11
	1/2	**KQ2N09-13**	47.5	22			22
3/8	1/2	**KQ2N11-13**	50	22	21	7	24

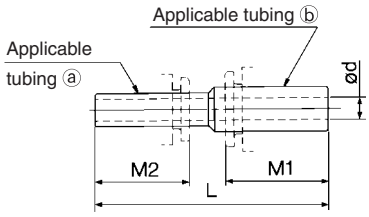

Tube Cap: KQ2C

Applicable tubing O.D. (inch)	Model	øD1	L	M	Weight (g)
5/32	**KQ2C03-00**	10.4	17	16	1
1/4	**KQ2C07-00**	13.2	18	17	2
5/16	**KQ2C09-00**	15.2	20.5	18.5	3
3/8	**KQ2C11-00**	17.9	22.5	21	6

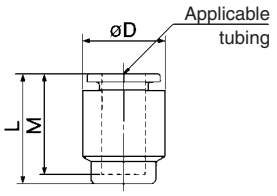

Plug: KQ2P, KQP

Applicable fitting size ød (inch)	Model Note)		øD	L	A	Weight (g)
1/8	**KQ2P-01**	**KQP-01**	5	31.5	16	1
5/32	**KQ2P-03**	**KQP-03**	6	32	16	1
3/16	**KQ2P-05**	**KQP-05**	6.8	34	17.5	1
1/4	**KQ2P-07**	**KQP-07**	8.5	35	18	1
5/16	**KQ2P-09**	**KQP-09**	10	39	20.5	2
3/8	**KQ2P-11**	**KQP-11**	11.5	43	22	3.5
1/2	**KQ2P-13**	**KQP-13**	15	46	24	5

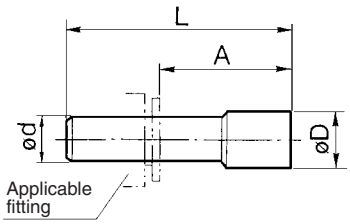

Inch-size One-touch Fittings

Series KQ2

Applicable Tubing: Inch Size
Connection Thread: M, R, Rc

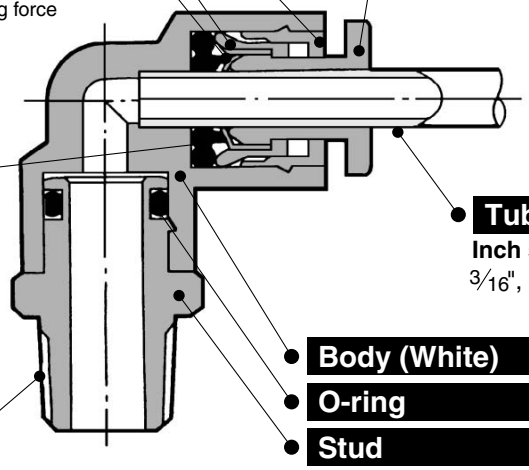

Guide

Collet

Chuck

Suitable for use with nylon, soft nylon and urethane.

Large retaining force.

Has large retaining force while holding force is increased by the collet.

Release button (Orange)

Light force for removal

When the fitting is removed from the tube, the chuck and collet are released, thus preventing them from biting into the tube excessively.

Seal

Can be used for a wide range of pressures from a low vacuum up to a pressure of 1.0 MPa

The use of a special profile ensures sealing and reduces resistance when the tube is inserted.

Tube

Inch size

3/16", 1/4", 5/16", 3/8", 1/2"

Connection thread

M, R, Rc

Body (White)

O-ring

Stud

Effective when piping in a confined space.

The body and the threaded portion can rotate. (To the degree for positioning)

PAT.

Applicable Tubing

Tubing material	Nylon, Soft nylon, Polyurethane
Tubing O.D. (inch)	ø3/16, ø1/4, ø5/16, ø3/8, ø1/2

Specifications

Fluid		Air/Water Note)
Maximum operating pressure		1.0 MPa
Proof pressure		3.0 MPa
Ambient and fluid temperature		–5 to 60°C (Water: 0 to 40°C) (No freezing)
Thread	Mounting section	JIS B 0203 (Taper thread for piping)
	Nut section	JIS B 0211, Class 2 (Metric fine thread)
Thread seal		With seal

Note) Applicable for general industrial water. Please consult with SMC if using for other kinds of fluid.
Also, the surge pressure must be under the maximum operating pressure.

Principal Parts Material

Body	C3604BD, PBT, PP
Stud	C3604BD (Thread portion)
Chuck	Stainless steel 304
Guide	Stainless steel 304, C3604BD, POM
Collet	POM
Release button	POM
Seal, O-ring	NBR
Gasket	Stainless steel 304, NBR

Model

Male connector
KQ2H P. 26

Use to pipe in the same direction from female thread. Most general style.

Straight union
KQ2H P. 26

Use to connect tubes in the same direction.

Male elbow
KQ2L P. 26

Use to pipe at right angles to female thread. Most general style.

Union elbow
KQ2L P. 26

Use to connect tubes at the right angles.

Plug-in elbow
KQ2L P. 27

Use to change by 90° in a tube fetching direction from One-touch fitting.

Reducer elbow
KQ2L P. 27

Use to change by 90° in a tube fetching direction from One-touch fitting and to size down.

Extended male elbow
KQ2W P. 27

Basically, it is used together with male elbow. Different point is that it is used for fittings to avoid from interfering with each other by making the piping two-level.

Male branch tee
KQ2T P. 27

Use to branch line from female thread in both 90° directions.

Union tee
KQ2T P. 28

Use to connect tubes in both 90° directions.

Male run tee
KQ2Y P. 28

Use to branch line in the same direction from female thread and 90° direction.

Plug-in reducer
KQ2R P. 28

Use to size down One-touch fittings.

Union "Y"
KQ2U P. 28

Use to branch line in the same direction.

Plug-in "Y"
KQ2U P. 29

Use to branch line in the same direction from One-touch fittings.

Branch "Y"
KQ2U P. 29

Use to branch line in the same direction from female thread.

Bulkhead union
KQ2E P. 29

Use to connect male thead and tube through a panel.

Bulkhead connector
KQ2E P. 29

Use to connect male thead and tube through a panel.

Gasket/Seal for M5 thread

Part no. M-5G2
Material Stainless steel 304, NBR

How to Order

KQ2 H 05 — 02 S

One-touch fittings

Model

H	Male connecter *
	Straight union
L	Male elbow *
	Union elbow
	Plug-in elbow
	Reducer elbow
W	Extended male elbow *
T	Male branch tee *
	Union tee
Y	Male run tee *
U	Union "Y"
	Plug-in "Y"
	Branch "Y" *
R	Plug-in reducer
E	Bulkhead union
	Bulkhead connector

*mark: With seal is available.

Applicable tubing O.D.

01	1/8
05	3/16
07	1/4
09	5/16
11	3/8
13	1/2

Port size

M5	M5 x 0.8
01	1/8
02	1/4
03	3/8
04	1/2
00	Same dia. tubing
99	Same dia. rod

With thread seal

Nil	Without seal
S	With thread seal

Male Connector: KQ2H

KQ2H01-M5
KQ2H07-M5

<KQ2H05-M5>

<R>

Applicable tubing O.D. (inch)	Connection thread M R	Model	H (Width across flats)	Note) øD	L	A *	M	Min. port size	Weight (g)
1/8	M5 x 0.8	**KQ2H01-M5**	7	—	16.7	13.6	12.7	2.5	2
	1/8	**KQ2H01-01S**	10	—	22	18	15.5		9
	1/4	**KQ2H01-02S**	14	—	19.5	13.5			16
3/16	M5 x 0.8	**KQ2H05-M5**	10.7	—	24	20.5	16.5	2.5	6
	1/8	**KQ2H05-01S**	11	—	22	18		3.5	11
	1/4	**KQ2H05-02S**	14	—	21	15			12
1/4	M5 x 0.8	**KQ2H07-M5**	11	10.3	18.4	15.3	13.6	2.5	3.3
	1/8	**KQ2H07-01S**	14	—	22.5	18.5	17	4.6	10
	1/4	**KQ2H07-02S**		—	23	17			15
	3/8	**KQ2H07-03S**	17	—	23	16.5			27
5/16	1/8	**KQ2H09-01S**	14	—	28	24	18.5	6	15
	1/4	**KQ2H09-02S**		—	26.5	20.5			16
	3/8	**KQ2H09-03S**	17	—	22.5	15.5			24
3/8	1/4	**KQ2H11-02S**	17	—	33.5	27.5	21	7	31
	3/8	**KQ2H11-03S**		—	29	22.5			29
	1/2	**KQ2H11-04S**	22	—	27	19			46
1/2	1/4	**KQ2H13-02S**	22	—	34.5	28.5	22	9	44
	3/8	**KQ2H13-03S**		—	33.5	27		9.6	
	1/2	**KQ2H13-04S**		—	30	22			

* Reference dimensions after R thread installation.
Note) øD: Max. diameter

KQ2H01-M5
<KQ2H07-M5>

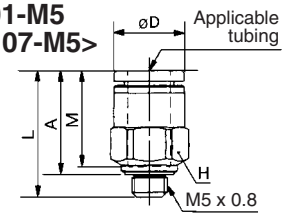

<KQ2H05>

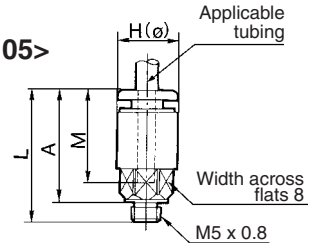

<R>

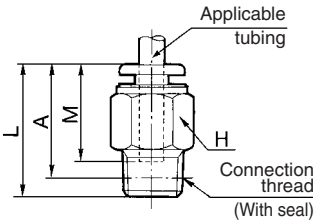

Straight Union: KQ2H

Applicable tubing O.D. (inch)	Model	Note) øD	L	M	Min. port size	Weight (g)
3/16	**KQ2H05-00**	11.4	34	16.5	3.5	4
1/4	**KQ2H07-00**	13.2	34.5	17	4.6	4
5/16	**KQ2H09-00**	15.2	38.5	18.5	6	6
3/8	**KQ2H11-00**	17.9	42.5	21	7	11
1/2	**KQ2H13-00**	21.7	44.5	22	9.6	16

Note) øD: Max. diameter

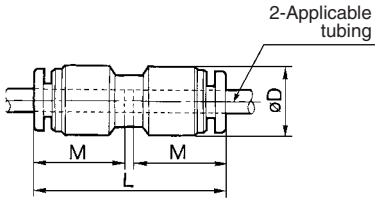

Male Elbow: KQ2L

Applicable tubing O.D. (inch)	Connection thread R	Model	H (Width across flats)	Note) øD1	øD2	L1	L2	A *	M	Min. port size	Weight (g)
1/8	M5 x 0.8	**KQ2L01-M5**	7	8.4	—	15.3	13.2	14.3	12.7	2.3	2.5
3/16	1/8	**KQ2L05-01S**	10	11.4	10	19.5	22.5	24	16.5	3.5	10
	1/4	**KQ2L05-02S**	14				26.5	26			19
1/4	M5 x 0.8	**KQ2L07-M5**	7	12	—	16.1	15.1	18	13.6	2.3	3.2
	1/8	**KQ2L07-01S**	10	13.2	10	20.5	23.5	26	17	4.6	10
	1/4	**KQ2L07-02S**	14				27.5	28			20
	3/8	**KQ2L07-03S**	17				29.5	29.5			32
5/16	1/8	**KQ2L09-01S**	12	15.2	12	23.5	24.5	28	18.5	6	12
	1/4	**KQ2L09-02S**	14				28.5	30			20
	3/8	**KQ2L09-03S**	17				30.5	31.5			28
3/8	1/4	**KQ2L11-02S**	17	17.9	17	25.5	29.5	32.5	21	7	23
	3/8	**KQ2L11-03S**					31.5	34			33
	1/2	**KQ2L11-04S**	22				35.5	36.5			59
1/2	1/4	**KQ2L13-02S**	17	21.7	17	28	31.5	36.5	22	9	28
	3/8	**KQ2L13-03S**					33.5	38.5		9.6	36
	1/2	**KQ2L13-04S**	22				37.5	40			62

* Reference dimensions after R thread installation.
Note) øD1: Max. diameter

<M5>

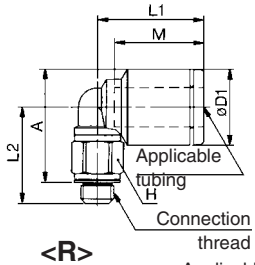

<R>

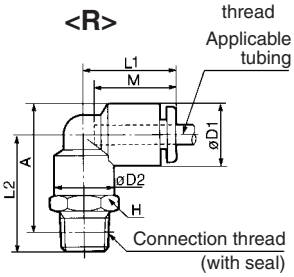

Union Elbow: KQ2L

Applicable tubing O.D. (inch)	Model	Note) øD	L	Q	M	Min. port size	Weight (g)
3/16	**KQ2L05-00**	11.4	19.5	4.8	16.5	3.5	5
1/4	**KQ2L07-00**	13.2	20.5	5.3	17	4.6	5
5/16	**KQ2L09-00**	15.2	23	6	18.5	6	7
3/8	**KQ2L11-00**	17.9	26	6.6	21	7	13
1/2	**KQ2L13-00**	21.7	29	7.8	22	9.6	18

Note) øD: Max. diameter

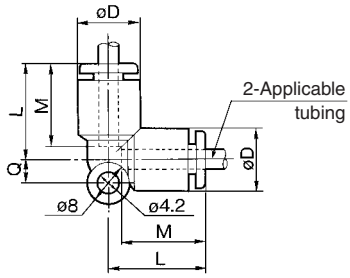

Plug-in Elbow: KQ2L

Applicable tubing O.D. (inch)	Applicable fitting size **ød** (inch)	Model	Note) **øD1**	**øD2**	**L1**	**L2**	**A**	**M**	Min. port size	Weight (g)
3/16	3/16	**KQ2L05-99**	11.4	10	19.5	34	23.5	16.5	3.5	7
1/4	1/4	**KQ2L07-99**	13.2	10	20	27.5	17.5	17	4.6	8
5/16	5/16	**KQ2L09-99**	15.2	12	22.5	31.5	21	18.5	6	6
3/8	3/8	**KQ2L11-99**	17.9	13.6	25	35	23	21	7	19
1/2	1/2	**KQ2L13-99**	21.7	17	28	44.5	34	22	9.6	27

Note) øD1: Max. diameter

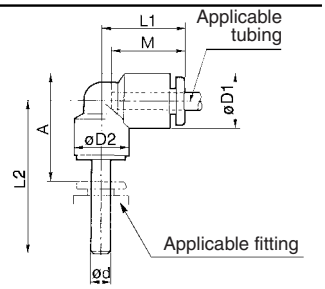

Reducer Elbow: KQ2L

Applicable tubing O.D. (inch)	Applicable fitting size **ød** (inch)	Model	Note) **øD1**	**øD2**	**L1**	**L2**	**A**	**M**	Min. port size	Weight (g)
3/16	1/4	**KQ2L05-07**	11.4	10	19.5	34.5	23.5	16.5	3.5	8
	5/16	**KQ2L05-09**				35.5	23			11
1/4	5/16	**KQ2L07-09**	13.2	10	20.5	36.5	24.5	17	4.6	12
	3/8	**KQ2L07-11**				37.5	23.5			17
5/16	3/8	**KQ2L09-11**	15.2	12	23.5	40.5	27.5	18.5	6	17
	1/2	**KQ2L09-13**				41.5				30
3/8	1/2	**KQ2L11-13**	17.9	17	25.5	43	30	21	7	25

Note) øD1: Max. diameter

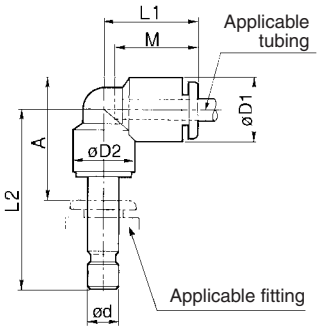

Extended Male Elbow: KQ2W

Applicable tubing O.D. (inch)	Connection thread R	Model	**H** (Width across flats)	Note) **øD1**	**øD2**	**L1**	**L2**	**A** *	**M**	Min. port size	Weight (g)
3/16	1/8	**KQ2W05-01S**	10	11.4	10	19.5	38	40	16.5	3.5	19
	1/4	**KQ2W05-02S**	14				44	43.5			41
1/4	1/8	**KQ2W07-01S**	10	13.2	10	20.5	40.5	43	17	4.6	20
	1/4	**KQ2W07-02S**	14				46.5	47			45
	3/8	**KQ2W07-03S**	17				48.5	49			69
5/16	1/8	**KQ2W09-01S**	12	15.2	12	23.5	43.5	47	18.5	6	30
	1/4	**KQ2W09-02S**	14				49.5	51			47
	3/8	**KQ2W09-03S**	17				51.5	53			74
3/8	1/4	**KQ2W11-02S**	17	17.9	17	25.5	56	59	21	7	69
	3/8	**KQ2W11-03S**					58	61			76
	1/2	**KQ2W11-04S**	22				64.5	65.5			147
1/2	1/4	**KQ2W13-02S**	17	21.7	17	28	58	63	22	9	72
	3/8	**KQ2W13-03S**					60	64.5		9.6	78
	1/2	**KQ2W13-04S**	22				66.5	69			149

* Reference dimensions after R thread installation.
Note) øD1: Max. diameter

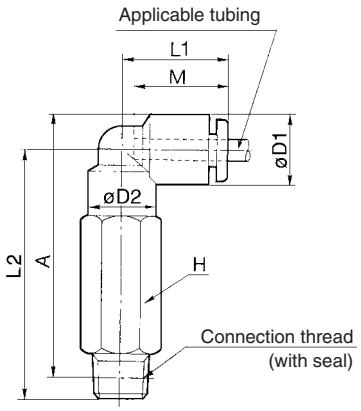

Male Branch Tee: KQ2T

Applicable tubing O.D. (inch)	Connection thread R	Model	**H** (Width across flats)	Note) **øD1**	**øD2**	**L1**	**L2**	**A** *	**M**	Min. port size	Weight (g)
3/16	1/8	**KQ2T05-01S**	10	11.4	10	19.5	22.5	24	16.5	3.5	12
	1/4	**KQ2T05-02S**	14				26.5	26			21
1/4	1/8	**KQ2T07-01S**	10	13.2	10	20.5	23.5	26	17	4.6	11
	1/4	**KQ2T07-02S**	14				27.5	28			21
	3/8	**KQ2T07-03S**	17				29.5	30			34
5/16	1/8	**KQ2T09-01S**	12	15.2	12	23	24.5	28	18.5	6	15
	1/4	**KQ2T09-02S**	14				28.5	30			23
	3/8	**KQ2T09-03S**	17				30.5	31.5			35
3/8	1/4	**KQ2T11-02S**	17	17.9	17	25.5	29.5	32.5	21	7	29
	3/8	**KQ2T11-03S**					31.5	34.5			38
	1/2	**KQ2T11-04S**	22				35.5	36.5			64
1/2	1/4	**KQ2T13-02S**	17	21.7	17	28	31.5	36.5	22	9	34
	3/8	**KQ2T13-03S**					33.5	38.5		9.6	43
	1/2	**KQ2T13-04S**	22				37.5	40			69

* Reference dimensions after R thread installation.
Note) øD1: Max. diameter

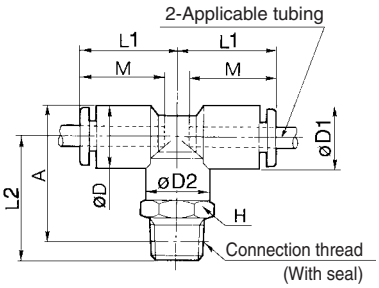

Union Tee: KQ2T

Applicable tubing O.D. (inch)	Model	Note) øD	L	Q	M	Min. port size	Weight (g)
3/16	**KQ2T05-00**	11.4	19.5	4.8	16.5	3.5	7
1/4	**KQ2T07-00**	13.2	20.5	5.3	17	4.6	8
5/16	**KQ2T09-00**	15.2	23	6	18.5	6	11
3/8	**KQ2T11-00**	17.9	26	6.6	21	7	18
1/2	**KQ2T13-00**	21.7	29	7.8	22	9.6	26

Note) øD: Max. diameter

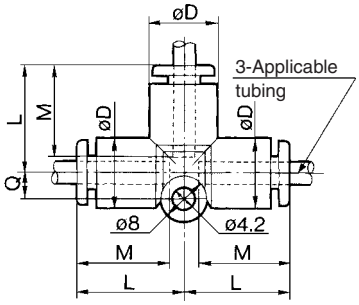

Male Run Tee: KQ2Y

Applicable tubing O.D. (inch)	Connection thread R	Model	H (Width across flats)	Note) øD1	øD2	L1	L2	A *	M	Min. port size	Weight (g)
3/16	1/8	**KQ2Y05-01S**	10	11.4	10	19.5	22.5	38	16.5	3.5	12
	1/4	**KQ2Y05-02S**	14				26.5	40			21
1/4	1/8	**KQ2Y07-01S**	10	13.2	10	20.5	23.5	40	17	4.6	11
	1/4	**KQ2Y07-02S**	14				27.5	42			21
	3/8	**KQ2Y07-03S**	17				29.5	44			34
5/16	1/8	**KQ2Y09-01S**	12	15.2	12	23.5	24.5	40	18.5	6	15
	1/4	**KQ2Y09-02S**	14				28.5	40			23
	3/8	**KQ2Y09-03S**	17				30.5	48			35
3/8	1/4	**KQ2Y11-02S**	17	17.9	17	25.5	29.5	49	21	7	29
	3/8	**KQ2Y11-03S**					31.5	51			38
	1/2	**KQ2Y11-04S**	22				35.5	53			64
1/2	1/4	**KQ2Y13-02S**	17	21.7	17	28	31.5	53.5	22	9	34
	3/8	**KQ2Y13-03S**					33.5	55.5		9.5	43
	1/2	**KQ2Y13-04S**	22				37.5	57			69

* Reference dimensions after R thread installation.
Note) øD1: Max. diameter

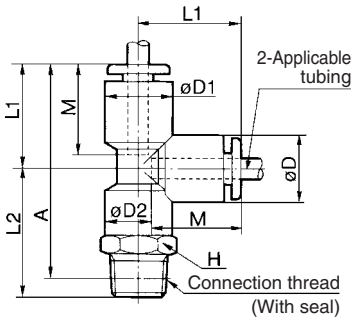

Plug-in Reducer: KQ2R

Applicable tubing O.D. (inch)	Applicable fitting size **ød** (inch)	Model	Note) øD	L1	A	M	Min. port size	Weight (g)
3/16	1/4	**KQ2R05-07**	11.4	34.5	18.5	16.5	3.5	12
	5/16	**KQ2R05-09**	10.7	36.5	18			14
1/4	5/16	**KQ2R07-09**	12.5	37	18.5	17	4.6	17
	3/8	**KQ2R07-11**	13.2	40	19.5			19
5/16	3/8	**KQ2R09-11**	14	40	19	18.5	6	24
	1/2	**KQ2R09-13**		41				32
3/8	1/2	**KQ2R11-13**	17.9	44	22	21	7	32

Note) øD: Max. diameter

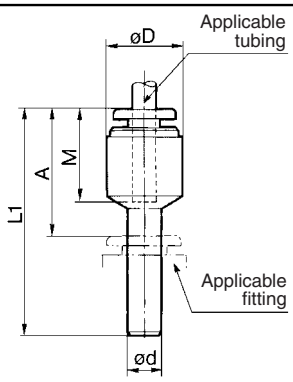

Union "Y": KQ2U

Applicable tubing O.D. (inch)	Model	Note) øD	L1	L2	P	Q	M	Min. port size	Weight (g)
3/16	**KQ2U05-00**	11.4	36.5	20.5	11.4	10.6	16.5	3.5	9
1/4	**KQ2U07-00**	13.2	38	21.5	13.2	12	17	4.6	9
5/16	**KQ2U09-00**	15.2	42.5	24.5	15.2	13.7	18.5	6	11

Note) øD: Max. diameter

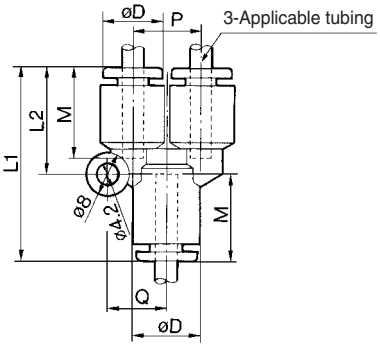

Plug-in "Y": KQ2U

Applicable tubing O.D. (inch)	Applicable fitting size **ød** (inch)	Model	Note) **øD**	**L1**	**L2**	**P**	**Q**	**A**	**M**	Min. port size	Weight (g)
3/16	3/16	**KQ2U05-99**	11.4	56	20.5	11.4	10.6	39.5	16.5	3.5	17
1/4	1/4	**KQ2U07-99**	13.2	56.5	21.5	13.2	12	39.5	17	4.6	18
5/16	5/16	**KQ2U09-99**	15.2	64.5	24.5	15.2	13.7	46	18.5	6	21

Note) øD: Max. diameter

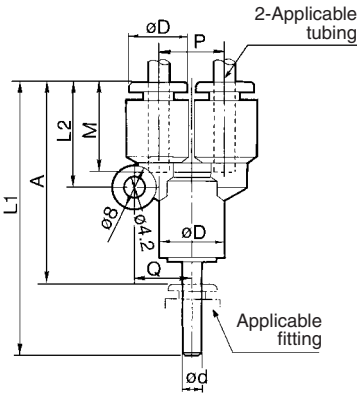

Branch "Y": KQ2U

Applicable tubing O.D. (inch)	Connection thread R	Model	**H** (Width across flats)	Note) **øD**	**L**	**P**	**A** *	**M**	Min. port size	Weight (g)
3/16	1/8	**KQ2U05-01S**	12	11.4	44	11.4	40	16.5	3.5	18
	1/4	**KQ2U05-02S**	14		48.5		42.5			18
1/4	1/8	**KQ2U07-01S**	14	13.2	46.5	13.2	42.5	17	4.6	19
	1/4	**KQ2U07-02S**			49.5					19
	3/8	**KQ2U07-03S**	17		51.5		45			19
5/16	1/8	**KQ2U09-01S**	17	15.2	52.5	15.2	48.5	18.5	6	21
	1/4	**KQ2U09-02S**			55.5		49.5			22
	3/8	**KQ2U09-03S**			56.5		50			35
3/8	1/4	**KQ2U11-02S**	19	17.9	60	17.9	54	21	7	42
	3/8	**KQ2U11-03S**			61		54.5			43
	1/2	**KQ2U11-04S**	22		64.5		56.5			56
1/2	1/4	**KQ2U13-02S**	22	21.7	64.5	21.7	58.5	22	9.5	31
	3/8	**KQ2U13-03S**			65.5		59			41
	1/2	**KQ2U13-04S**			68.5		60.5			68

* Reference dimensions after R thread installation.
Note) øD: Max. diameter

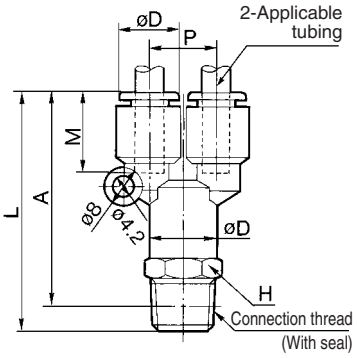

Bulkhead Union: KQ2E

Applicable tubing O.D. (inch)	Model	**T (M)**	**H** (Width across flats)	**L**	Mounting hole	**M**	Min. port size	Weight (g)
3/16	**KQ2E05-00M**	M14 x 1	17	34	15	16.5	3.5	30
1/4	**KQ2E07-00M**	M14 x 1	17	34.5	15	17	4.6	30
5/16	**KQ2E09-00M**	M16 x 1	19	38	17	18.5	6	48
3/8	**KQ2E11-00M**	M20 x 1	24	42.5	21	21	7	62
1/2	**KQ2E13-00M**	M22 x 1	27	44.5	23	22	9.6	85

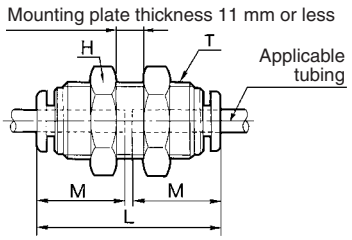

Bulkhead Connector: KQ2E

Applicable tubing O.D. (inch)	Connection thread R	Model	**T (M)**	**H1** (Width across flats)	**H2** (Width across flats)	**L1**	**L2**	**M**	Min. port size	Mounting hole	Weight (g)
3/16	1/8	**KQ2E05-01**	M14 x 1	17	17	28	11.5	16.5	3.5	15	30
1/4	1/4	**KQ2E07-02**	M14 x 1	17	17	32.5	14.5	17	4.6	15	31
5/16	3/8	**KQ2E09-03**	M16 x 1	19	19	35	15	18.5	6	17	36
3/8	3/8	**KQ2E11-03**	M20 x 1	22	24	35	14.5	21	7	21	64
1/2	3/8	**KQ2E13-03**	M22 x 1	24	27	37	14.5	22	9.6	23	78
	1/2	**KQ2E13-04**	M22 x 1			41.5	18.5				74

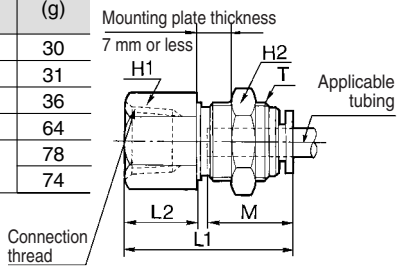

Inch-size Uni One-touch Fittings

Series KQ2

Applicable Tubing: Inch Size
Connection Thread: Rc, G, NPT, NPTF

New-stand male thread for piping that reduces the screw-in time by 1/3.

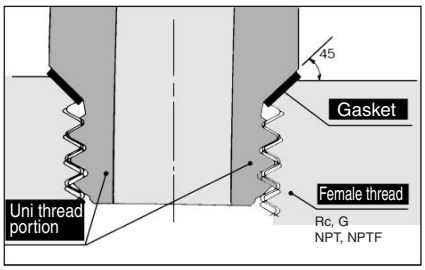

Uni thread ridge shape

A gasket made of a stainless sheet covered with laminated NBR on both sides is seated on the chamfer of a female thread for a perfect sealing construction irrespective of the difference in thread diameters due to the difference in the types of female threads, variation in tolerance, or difference in the size of chamfer.

A ridge shape has been created as a Uni thread for common applications for Rc, G, NPT and NPTF.

The male thread for piping drastically cuts piping man-hours.

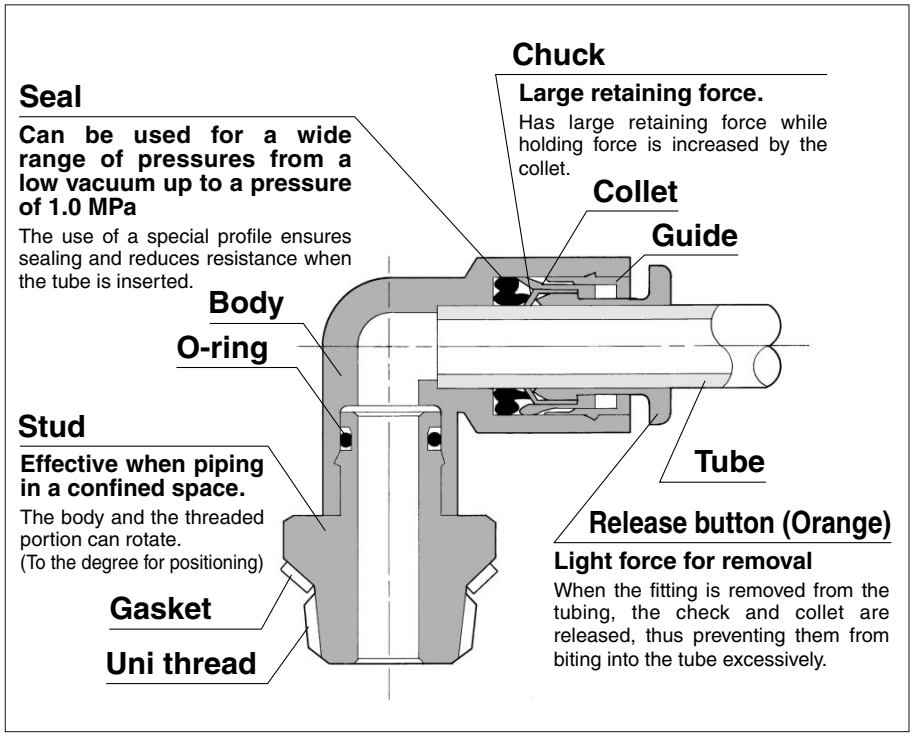

Product's Color

Series	Body	Release button
Series KQ2	White	Orange
Series KQ	Black	Red

Applicable Tubing

Tubing material	Nylon, Soft nylon, Polyurethane
Tubing O.D. (inch)	ø 1/8, ø5/32, ø3/16, ø 1/4 , ø5/16, ø 3/8, ø1/2

Specifications

Fluid	Air/Water Note)
Maximum operating pressure	1.0 MPa
Operating vacuum pressure	–100 kPa
Proof pressure	3.0 MPa
Ambient and fluid temperature	–5 to 60°C, Water: 0 to 40°C (No freezing)

Note) Applicable for general industrial water. Please consult with SMC if using for other kinds of fluid.
Also, the surge pressure must be under the maximum operating pressure.

Principal Parts Material

Body	C3604BD, PBT
Stud	C3604BD (Thread portion)
Chuck	Stainless steel 304
Guide	Stainless steel 304, C3604BD, POM
Collet, Release button	POM
Seal, O-ring	NBR
Gasket	Stainless steel 304, NBR

Model

Male connector
KQ2H P. 33

Use to pipe in the same direction from female thread.
Most general style.

Male elbow
KQ2L P. 33

Use to pipe at right angles to female thread.
Most general style.

Male branch tee
KQ2T P. 33

Use to branch line from female thread in both 90° directions.

Male run tee
KQ2Y P. 34

Use to branch line in the same direction from female thread and in 90° direction.

Branch "Y"
KQ2U P. 34

Use to branch line in the same direction from female thread.

Extended male elbow
KQ2W P. 34

Basically, it is used together with male elbow. Different point is that it is used for fittings to avoid from interfering with each other by making the piping two-level.

Gasket
KQG

Thread seal

How to Order

KQ 2 H 05 — U01

One-touch fittings

Product's color

Symbol	Body	Release button
2	White	Orange
Nil	Black	Red

Model

H	Male connector
L	Male elbow
W	Extended male elbow
T	Male branch tee
Y	Male run tee
U	Branch "Y"

Applicable tubing O.D.

01	1/8
03	5/32
05	3/16
07	1/4
09	5/16
11	3/8
13	1/2

Port size

U01	Uni 1/8
U02	Uni 1/4
U03	Uni 3/8
U04	Uni 1/2

How to Order Gasket

KQG — U01

Gasket for Uni One-touch fittings

Applicable port size

U01	Uni 1/8
U02	Uni 1/4
U03	Uni 3/8
U04	Uni 1/2

<Inch size> Male Connector: KQ2H

Applicable tubing O.D. (inch)	Connection thread Uni thread	Model	H (Width across flats)	L	A *	M	Min. port size	Weight (g)
1/8	1/8	**KQ2H01-U01**	11.11	18.5	13.5	15.5	2.5	7
	1/4	**KQ2H01-U02**	14.29	16	10			10
5/32	1/8	**KQ2H03-U01**	11.11	18.5	13.5	16	3	6
	1/4	**KQ2H03-U02**	14.29	16.5	10.5			10
3/16	1/8	**KQ2H05-U01**	12.7	18.5	13.5	16	3.5	7
	1/4	**KQ2H05-U02**	14.29	17	11			9
1/4	1/8	**KQ2H07-U01**	14.29	22.5	17.5	17	4.6	9
	1/4	**KQ2H07-U02**		20.5	14.5			11
	3/8	**KQ2H07-U03**	17.46	17.5	11.5			16
5/16	1/8	**KQ2H09-U01**	14.29	25	20.5	18.5	6	12
	1/4	**KQ2H09-U02**		21.5	15.5			9
	3/8	**KQ2H09-U03**	17.46	19.5	13.5			16
3/8	1/4	**KQ2H11-U02**	17.46	28	22	21	7	19
	3/8	**KQ2H11-U03**						16
	1/2	**KQ2H11-U04**	22.23	22	14			30
1/2	1/4	**KQ2H13-U02**	22.23	30	24	22	9	33
	3/8	**KQ2H13-U03**		28.5	22.5		9.6	30
	1/2	**KQ2H13-U04**		25	17			28

∗ Reference dimensions after Uni thread installation.

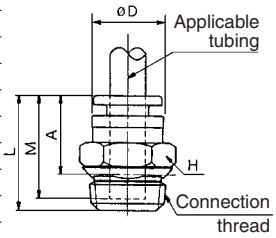

<Inch size> Male Elbow: KQ2L

Applicable tubing O.D. (inch)	Connection thread Uni thread	Model	H (Width across flats)	øD1	øD2	L1	L2	A *	M	Min. port size	Weight (g)
1/8	1/8	**KQ2L01-U01**	11.11	9.6	10	17.5	20	20.5	15.5	2.5	6
	1/4	**KQ2L01-U02**	14.29				22	21			13
5/32	1/8	**KQ2L03-U01**	11.11	10.4	10	18	20	21.5	16	3	7
	1/4	**KQ2L03-U02**	14.29				22.5				13
3/16	1/8	**KQ2L05-U01**	11.11	11.4	10	19.5	20.5	22.5	16	3.5	8
	1/4	**KQ2L05-U02**	14.29				23				14
1/4	1/8	**KQ2L07-U01**	11.11	13.2	10	20.5	21.5	24	17	4.6	8
	1/4	**KQ2L07-U02**	14.29				23.5	24.5			15
	3/8	**KQ2L07-U03**	17.46				24.5	25			21
5/16	1/8	**KQ2L09-U01**	12.7	15.2	12	23.5	22.5	25.5	18.5	6	10
	1/4	**KQ2L09-U02**	14.29				24.5	26.5			15
	3/8	**KQ2L09-U03**	17.46				25.5	27			17
3/8	1/4	**KQ2L11-U02**	17.46	17.9	17	25.5	26.5	29.5	21	7	18
	3/8	**KQ2L11-U03**					27	30			22
	1/2	**KQ2L11-U04**					30	31			41
1/2	1/4	**KQ2L13-U02**	17.46	21.7	17	28	28.5	33	22	9	23
	3/8	**KQ2L13-U03**					28.5	33.5		9.6	31
	1/2	**KQ2L13-U04**	22.23				32	35			44

∗ Reference dimensions after Uni thread installation.

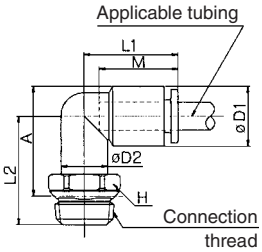

<Inch size> Male Branch tee: KQ2T

Applicable tubing O.D. (inch)	Connection thread Uni thread	Model	H (Width across flats)	øD1	øD2	L1	L2	A *	M	Min. port size	Weight (g)
1/8	1/8	**KQ2T01-U01**	11.11	9.6	10	17.5	20	21	15.5	2.5	8
	1/4	**KQ2T01-U02**	14.29				22				15
5/32	1/8	**KQ2T03-U01**	11.11	10.4	10	18	20	21.5	16	3	9
	1/4	**KQ2T03-U02**	14.29				22.5				15
3/16	1/8	**KQ2T05-U01**	11.11	11.4	10	19.5	20.5	22.5	16.5	3.5	10
	1/4	**KQ2T05-U02**	14.29				23	22.5			16
1/4	1/8	**KQ2T07-U01**	11.11	13.2	10	20.5	21.5	24	17	4.6	10
	1/4	**KQ2T07-U02**	14.29				23.5	24.5			17
	3/8	**KQ2T07-U03**	17.46				24.5	25			24
5/16	1/8	**KQ2T09-U01**	12.7	15.2	12	23.5	22.5	26	18.5	6	14
	1/4	**KQ2T09-U02**	14.29				24.5	26.5			19
	3/8	**KQ2T09-U03**	17.46				25.5	27			25
3/8	1/4	**KQ2T11-U02**	17.46	17.9	17	25.5	26.5	29.5	21	7	24
	3/8	**KQ2T11-U03**					27	30			27
	1/2	**KQ2T11-U04**	22.23				30	31			46
1/2	1/4	**KQ2T13-U02**	17.46	21.7	17	28	28.5	33	22	9	29
	3/8	**KQ2T13-U03**						33.5		9.6	32
	1/2	**KQ2T13-U04**	22.23				32	35			51

∗ Reference dimensions after Uni thread installation.

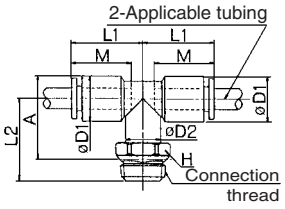

<Inch size> Male Run Tee: KQ2Y

Applicable tubing O.D. (inch)	Connection thread Uni thread	Model	H (Width across flats)	øD1	øD2	L1	L2	A *	M	Min. port size	Weight (g)
1/8	1/8	KQ2Y01-U01	11.11	9.6	10	17.5	20	33.5	15.5	2.5	8
	1/4	KQ2Y01-U02	14.29				22				15
5/32	1/8	KQ2Y03-U01	11.11	10.4	10	18	20	34	16	3	9
	1/4	KQ2Y03-U02	14.29				22.5	34.5			15
3/16	1/8	KQ2Y05-U01	11.11	11.4	10	19.5	20.5	36	16.5	3.5	10
	1/4	KQ2Y05-U02	14.29				23	36.5			16
1/4	1/8	KQ2Y07-U01	11.11	13.2	10	20.5	21.5	38	17	4.6	10
	1/4	KQ2Y07-U02	14.29				23.5	37.5			17
	3/8	KQ2Y07-U03	17.46				24.5	39			24
5/16	1/8	KQ2Y09-U01	12.7	15.2	12	23.5	22.5	42	18.5	6	14
	1/4	KQ2Y09-U02	14.29				24.5				19
	3/8	KQ2Y09-U03	17.46				25.5	43			25
3/8	1/4	KQ2Y11-U02	17.46	17.9	17	25.5	26.5	46	21	7	24
	3/8	KQ2Y11-U03					27	46.5			27
	1/2	KQ2Y11-U04	22.23				30	47.5			46
1/2	1/4	KQ2Y13-U02	17.46	21.7	17	28	28.5	50.5	22	9	29
	3/8	KQ2Y13-U03								9.6	32
	1/2	KQ2Y13-U04	22.23				32	52			51

* Reference dimensions after Uni thread installation.

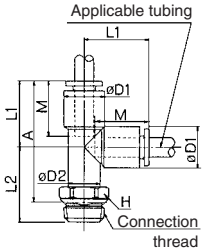

<Inch size> Branch "Y": KQ2U

Applicable tubing O.D. (inch)	Connection thread Uni thread	Model	H (Width across flats)	øD	L	P	A *	M	Min. port size	Weight (g)
1/8	1/8	KQ2U01-U01	12.7	9.6	38.5	9.6	34.5	15.5	2.5	10
	1/4	KQ2U01-U02	14.29		40.5					
5/32	1/8	KQ2U03-U01	12.7	10.4	40	10.4	36	16	3	12
	1/4	KQ2U03-U02	14.29		42					
3/16	1/8	KQ2U05-U01	12.7	11.4	42	11.4	38	16.5	3.5	14
	1/4	KQ2U05-U02	14.9		44.5		39			
1/4	1/8	KQ2U07-U01	14.29	13.2	44.5	13.2	40.5	17	4.6	15
	1/4	KQ2U07-U02			46		40			
	3/8	KQ2U07-U03	17.46		46.5		40.5			
5/16	1/8	KQ2U09-U01	17.46	15.2	50.5	15.2	46.5	18.5	6	20
	1/4	KQ2U09-U02			52		46			18
	3/8	KQ2U09-U03			51.5		45.5			25
3/8	1/4	KQ2U11-U02	19.05	17.9	56.5	17.9	50.5	21	7	37
	3/8	KQ2U11-U03								32
	1/2	KQ2U11-U04	22.23		59		51			38
1/2	1/4	KQ2U13-U02	22.23	21.7	61	21.7	55	22	9.6	26
	3/8	KQ2U13-U03								30
	1/2	KQ2U13-U04			62.7		54.7			50

* Reference dimensions after Uni thread installation.

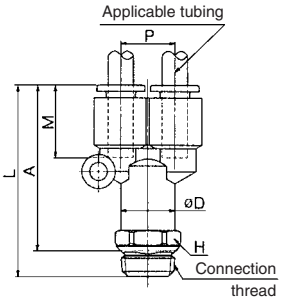

<Inch size> Extended Male Elbow: KQ2W

Applicable tubing O.D. (inch)	Connection thread Uni thread	Model	H (Width across flats)	øD1	øD2	L1	L2	A *	M	Min. port size	Weight (g)
1/8	1/8	KQ2W01-U01	11.11	9.6	10	17.5	34.5	34	15.5	2.5	17
	1/4	KQ2W01-U02	14.29				36.5	35.5			26
5/32	1/8	KQ2W03-U01	11.11	10.4	10	18	34.5	35.5	16	3	18
	1/4	KQ2W03-U02	14.29				37	36.1			26
3/16	1/8	KQ2W05-U01	11.11	11.4	10	19.5	35	36	16.5	3.5	19
	1/4	KQ2W05-U02	14.29				40	39.5			27
1/4	1/8	KQ2W07-U01	11.11	13.2	10	20.5	36	37.5	17	4.6	21
	1/4	KQ2W07-U02	14.29				41	41.5			31
	3/8	KQ2W07-U03	17.46				41.5	42			39
5/16	1/8	KQ2W09-U01	12.7	15.2	12	23.5	43.5	46.5	18.5	6	26
	1/4	KQ2W09-U02	14.29				45.5	47			35
	3/8	KQ2W09-U03	17.46				46	48			39
3/8	1/4	KQ2W11-U02	17.46	17.9	17	25.5	52.5	55.5	21	7	59
	3/8	KQ2W11-U03					52	55			55
	1/2	KQ2W11-U04	22.23				54.5	55.5			97
1/2	1/4	KQ2W13-U02	17.46	21.7	17	28	54	59	22	9	64
	3/8	KQ2W13-U03								9.6	64
	1/2	KQ2W13-U04	22.23				56				100

* Reference dimensions after Uni thread installation.

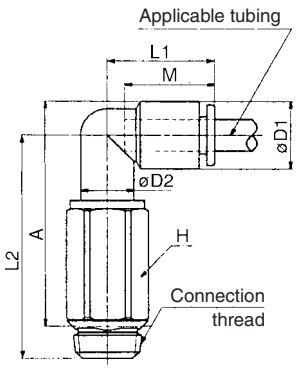

⚠ Precautions

Be sure to read before handling. Refer to pages 15-18-3 to 15-18-4 for Safety Instructions and Common Precautions on the products mentioned in this catalog, and refer to pages 15-1-10 to 15-1-11 for Precautions on every series.

Handling of Uni One-touch Fittings

⚠ Caution

1. First tighten by hand, then use a proper wrench, which could be suitable for the hexagon across flats on the body to tighten with the proper tightening torque given below.

Connecting Female Thread: Rc, NPT, NPTF

Nominal size of Uni thread	Recommended tightening torque (N·m)	Approx. spanner tightening angle after tightened by hand (deg)
1/8	5 to 7	30 to 60
1/4	11 to 13	30 to 60
3/8	14 to 16	15 to 45
1/2	20 to 22	15 to 30

Connecting Female Thread: G

Nominal size of Uni thread	Recommended tightening torque (N·m)	Approx. spanner tightening angle after tightened by hand (deg)
1/8	3 to 4	30 to 45
1/4	4 to 5	15 to 30
3/8	8 to 9	15 to 30
1/2	14 to 15	15 to 30

2. Gasket can be recycled 6 to 10 times. It can be replaced easily when it has sustained damage. A broken gasket can be removed by holding and then turning in the same direction of loosening the thread. If it is difficult to remove, cut it with nippers, etc. In such a case, use caution not to scratch seat face because the seat face of 45° gasket of fitting is the sealing face.

3. Please consult with SMC if using for other fluids than air.

4. Other precautions on handling, etc. are the same as those of One-touch fittings.

Chamfered area for female thread (Recommended value)

By chamfering as shown in the following table, machining of threads is easier and effective for burr prevention, too.

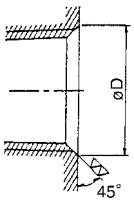

Female thread size	Chamfered port size øD (Recommended value)	
	Rc, G	NPT, NPTF
1/8	10.2 to 11.8	10.5 to 11.8
1/4	13.6 to 15.8	14.1 to 15.8
3/8	17.1 to 19.4	17.4 to 19.4
1/2	21.4 to 25.1	21.7 to 25.1