THIS DRAWING IS UNPUBLISHED. RELEASED FOR PUBLICATION -,- .
© COPYRIGHT - By - ALL RIGHTS RESERVED.

LOC	DIST
AD	25

REVISIONS

P	LTR	DESCRIPTION	DATE	DWN	APVD
	T	REVISED PER ECO-13-011071	12JUL2013	KH	RP

1. HOUSING MATERIAL: GLASS-FILLED POLYMER. COLOR: GRAY.
2. CONTACT MATERIAL: COPPER ALLOY.
3. CONTACT FINISH: DIN 41612 CLASS 2 IN CONTACT AREA. TIN PLATE ON POSTS.
4. CONTACT FINISH: DIN 41612 CLASS 3 IN CONTACT AREA. TIN PLATE ON POSTS.
5. PART NUMBER, DATE CODE IDENTIFICATION, CSA LOGO IN THIS APPROXIMATE AREA.
6. POINT OF MEASUREMENT FOR FINISH.
7. ACTION PIN POSTS REQUIRE 1.57[.062] MINIMUM THICK PC BOARD. RECOMMENDED PC BOARD HOLES ARE ø1.15±0.2[.0453±.001] DRILLED HOLE WITH 0.02-0.07[.001-.003] COPPER AND 0.008[.0003] MINIMUM TIN-LEAD PLATING. FINISHED HOLE AFTER PLATING, ø0.94-1.09[.037-.043].
8. CONTACT AREA FINISH: 0.00076mm [.000030] MIN GOLD OVER 0.00127 [.000050] MIN NICKEL. TAIL FINISH: 0.0025 [.000100] MIN MATTE TIN OVER 0.00127 [.000050] MIN NICKEL.
9. CONTACT AREA FINISH: 0.00127 [.000050] MIN GOLD OVER 0.00127 [.000050] MIN NICKEL. TAIL FINISH: 0.0025 [.000100] MIN MATTE TIN OVER 0.00127 [.000050] MIN NICKEL.

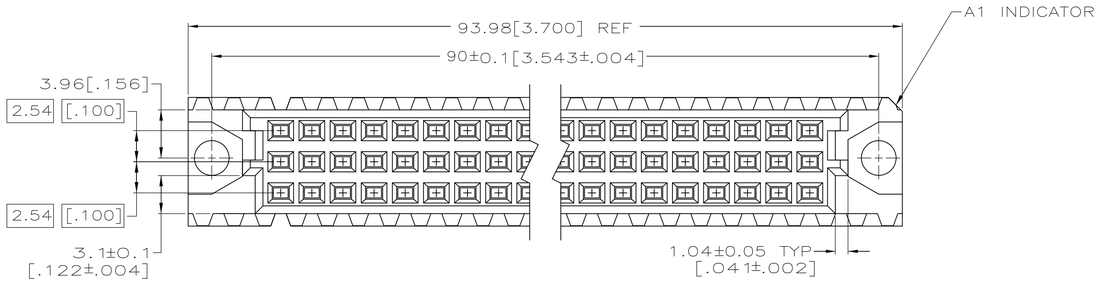

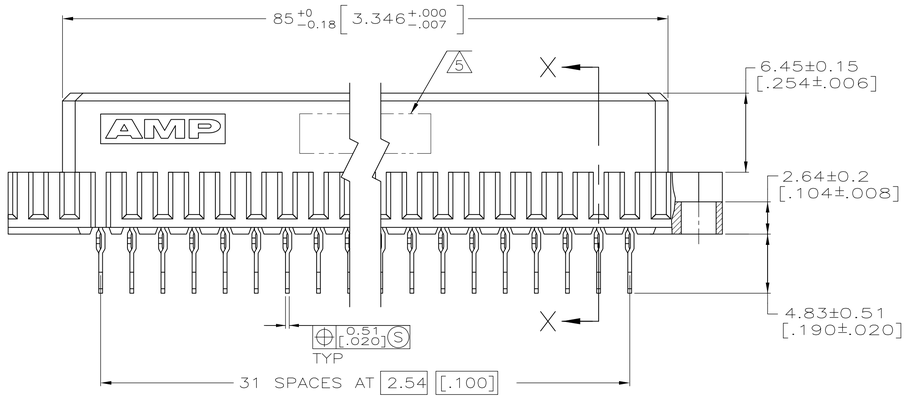

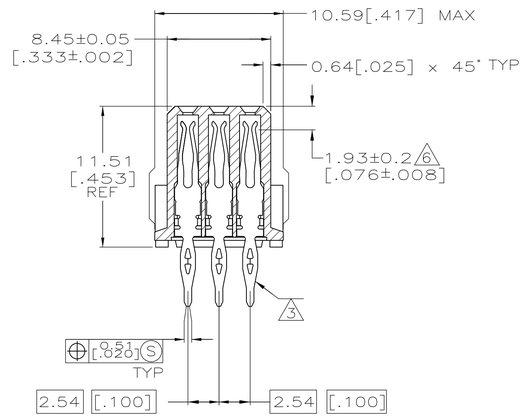

SECTION X-X

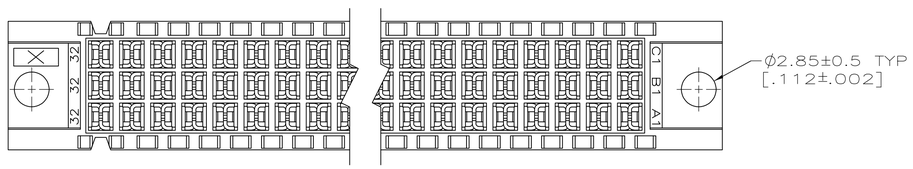

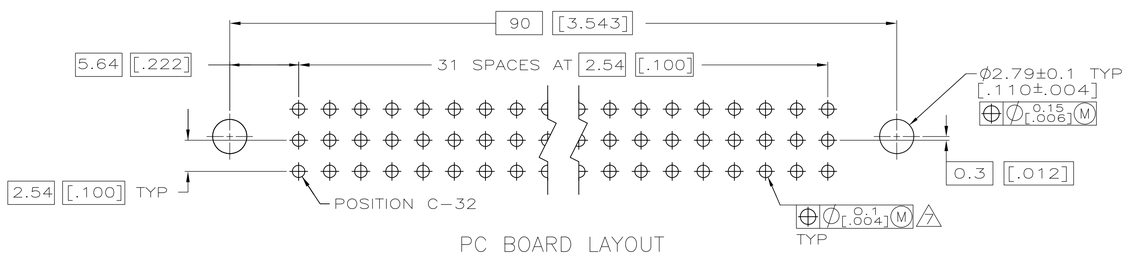

PC BOARD LAYOUT

4	1 THRU 32	X	X	X	96	5535032-9
5	1 THRU 32	X	X	X	96	5535032-6
3	1 THRU 32	X	X	X	96	5535032-5
3	1 THRU 32	X	X	X	96	5535032-4
9	1 THRU 32	X	X	X	96	5535032-1
FINISH	POSITIONS LOADED	ROWS LOADED C	B	A	NO. OF LOADED POSITION	ASSY PART NUMBER

THIS DRAWING IS A CONTROLLED DOCUMENT.

DIMENSIONS: mm [INCHES]

TOLERANCES UNLESS OTHERWISE SPECIFIED:
0 PLC ± -
1 PLC ± -
2 PLC ± 0.13[.005]
3 PLC ± -
4 PLC ± -
ANGLES ± -

MATERIAL 1 2
FINISH 3 4

DWN J. POLIGNONE 25MAY05
CHK A. SHARPE 25MAY05
APVD A. SHARPE 25MAY05
PRODUCT SPEC —
APPLICATION SPEC —
WEIGHT —

TE Connectivity

NAME ASSEMBLY, RECEPTACLE, EUROCARD, TYPE C, LEAD-FREE, 96 POSITION, 4.83[.190] TOOLESS, PRESS-FIT

SIZE	CAGE CODE	DRAWING NO	RESTRICTED TO
A1	00779	C-5535032	—

CUSTOMER DRAWING | SCALE 4:1 | SHEET 1 OF 1 | REV T