THIS DRAWING IS UNPUBLISHED. RELEASED FOR PUBLICATION -,- .
© COPYRIGHT - By - ALL RIGHTS RESERVED.

REVISIONS

P	LTR	DESCRIPTION	DATE	DWN	APVD
	H	REVISE PER ECR-16-003354	15MAR2016	LN	RS

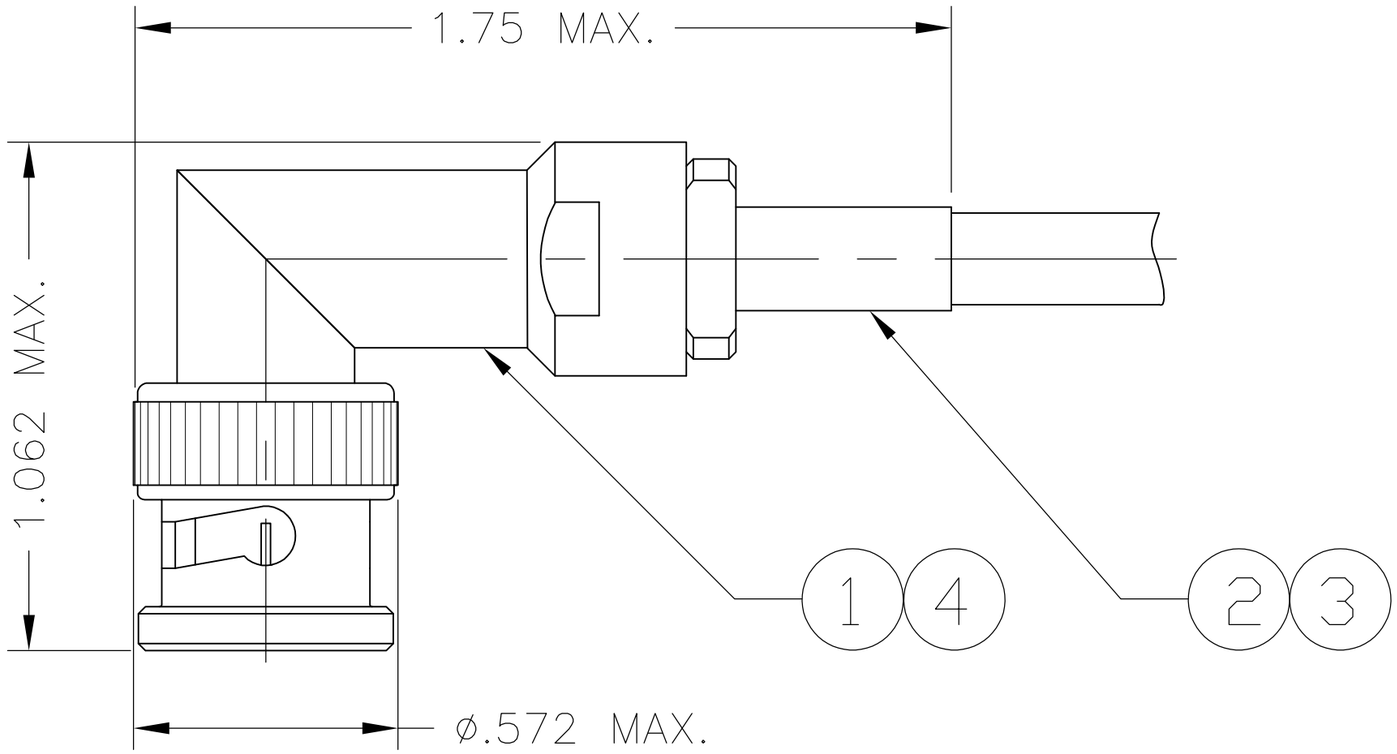

Note:

1 FOR USE WITH: RG-58/U, 58A/U, 58B/U, 58C/U

2 USE CRIMPING TOOL: 69140-1

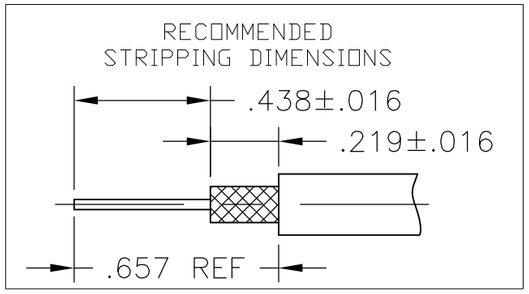

QTY	DESCRIPTION	PART NO.	ITEM NO.
1	GASKET	2-329106-1	4
1	CRIMP END ASSY	9-50793-0	3
1	FERRULE	9-328663-0	2
1	PLUG ASSY, RIGHT ANGLE	330797	1

THIS DRAWING IS A CONTROLLED DOCUMENT.

DIMENSIONS: mm

TOLERANCES UNLESS OTHERWISE SPECIFIED:
0 PLC ± -
1 PLC ± -
2 PLC ± -
3 PLC ± -
4 PLC ± -
ANGLES ± -

MATERIAL -

FINISH -

DWN — 20APR1983
CHK — 11MAY1983
APVD — 25APR1984
PRODUCT SPEC —
APPLICATION SPEC 408-1799
WEIGHT —

TE Connectivity

NAME
CONNECTOR, COAXIAL,RF PLUG
RIGHT ANGLE, SERIES BNC
—

SIZE	CAGE CODE	DRAWING NO	RESTRICTED TO
A3	00779	C-331175	—

CUSTOMER DRAWING

SCALE	SHEET	REV
1:1	1 OF 1	H