THIS DRAWING IS UNPUBLISHED. RELEASED FOR PUBLICATION – ,N/A .
© COPYRIGHT N/A BY TYCO ELECTRONICS CORPORATION. ALL RIGHTS RESERVED.

LOC	DIST
DF	SO

REVISIONS

P	LTR	DESCRIPTION	DATE	DWN	APVD
	B	REV PER ECO-05-002595	07-05	AA	DE

1. MARKED PER MIL-STD-130.
2. TO MATE WITH AMP LGH-1/4 RECEPTACLE WITH A .250 [6.35] BARREL DEPTH.
3. PIGTAIL IS SOLDER DIPPED.
4. INSULATION CUT, BUT NOT REMOVED.

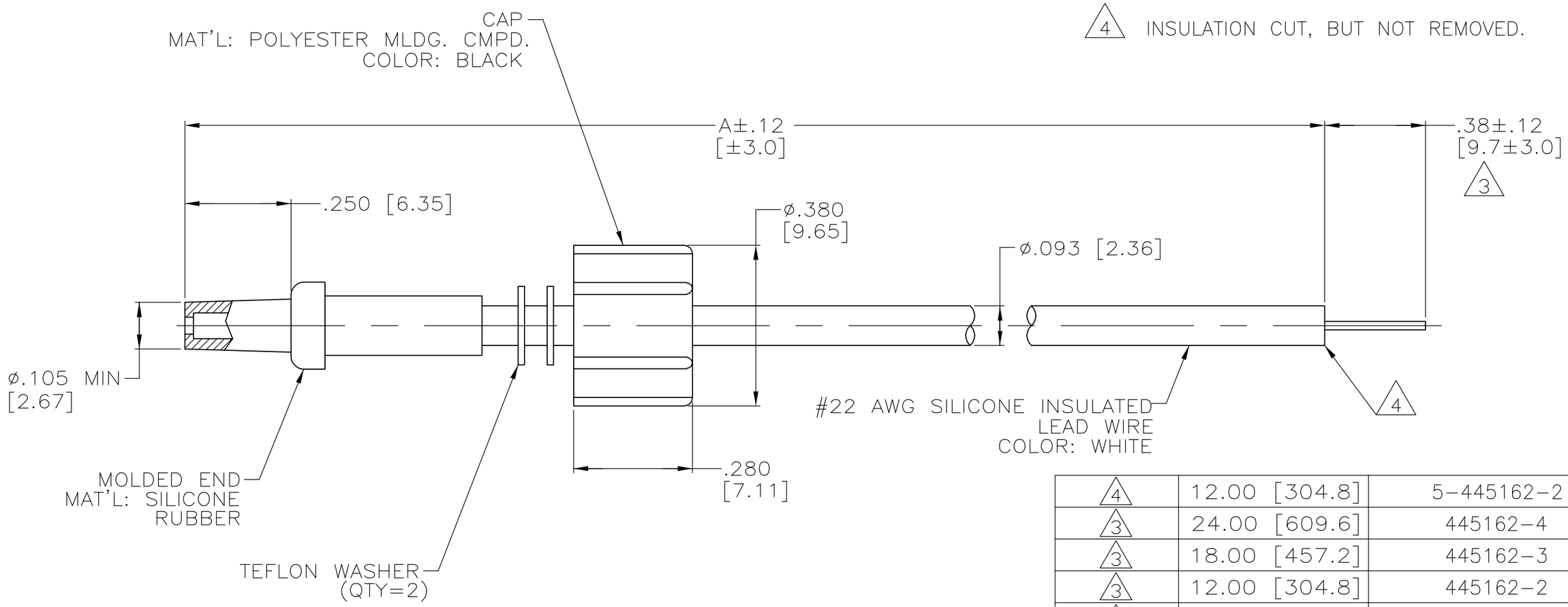

REMARKS	DIM A	PART NUMBER
4	12.00 [304.8]	5-445162-2
3	24.00 [609.6]	445162-4
3	18.00 [457.2]	445162-3
3	12.00 [304.8]	445162-2
3	6.00 [152.4]	445162-1

THIS DRAWING IS A CONTROLLED DOCUMENT.

DIMENSIONS: INCHES

TOLERANCES UNLESS OTHERWISE SPECIFIED:
0 PLC ± –
1 PLC ± –
2 PLC ± –
3 PLC ± .005 [0.13]
4 PLC ± –
ANGLES ± –

MATERIAL –
FINISH –

DWN C.C.THOMAS 16-JUN-97
CHK S.GLATFELTER 07-JUL-97
APVD S.GLATFELTER 07-JUL-97
PRODUCT SPEC –
APPLICATION SPEC –
WEIGHT –

tyco Electronics
Tyco Electronics Corporation
Harrisburg, Pa 17105-3608

NAME
LEAD ASSY
SGL END
LGH-1/4

SIZE	CAGE CODE	DRAWING NO	RESTRICTED TO
A3	00779	C-445162	–

CUSTOMER DRAWING
SCALE 4:1 SHEET 1 OF 1 REV B