THIS DRAWING IS UNPUBLISHED. RELEASED FOR PUBLICATION -.- .
© COPYRIGHT - BY TYCO ELECTRONICS CORPORATION. ALL RIGHTS RESERVED.

LOC	DIST
DF	DO

REVISIONS

P	LTR	DESCRIPTION	DATE	DWN	APVD
	F	REV PER ECO 05-014961	03FEB06	BL	CT

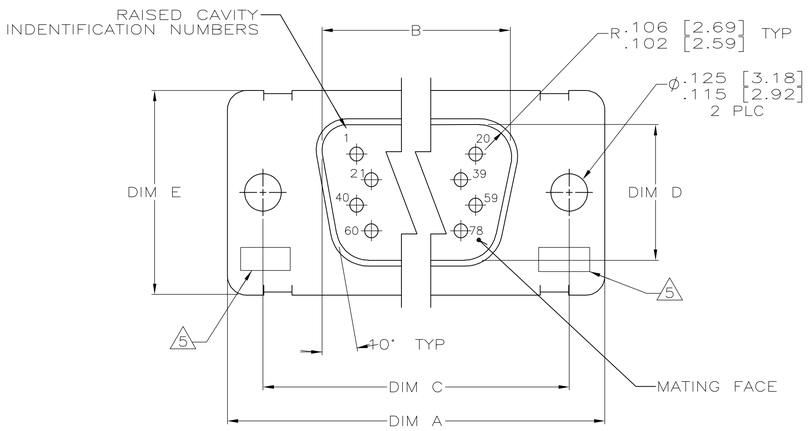

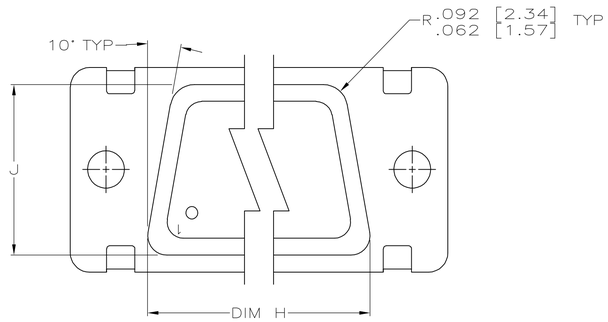

VIEW Z–Z

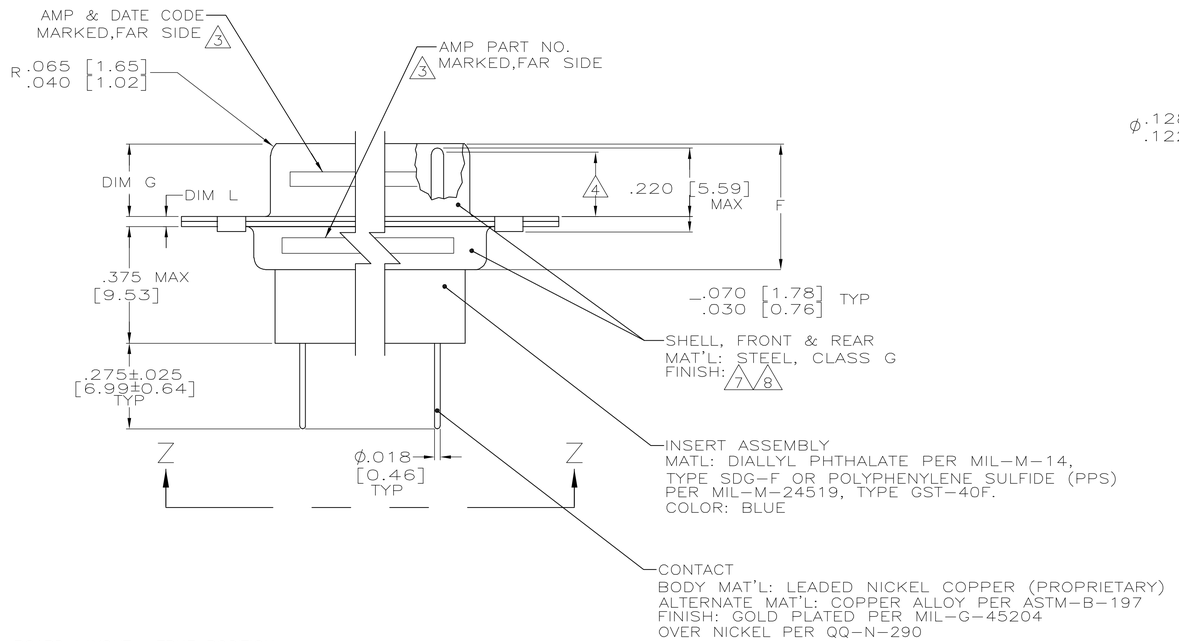

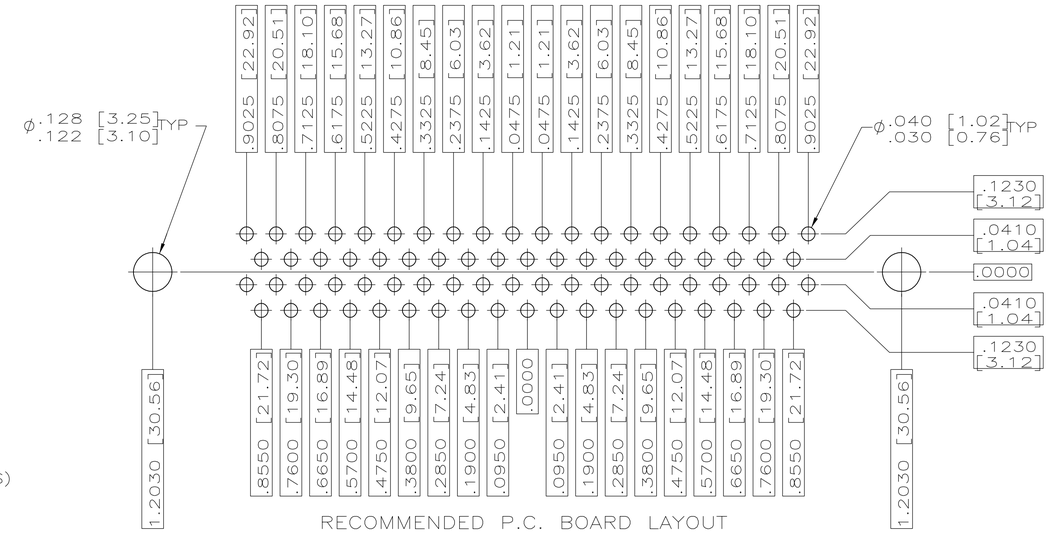

RECOMMENDED P.C. BOARD LAYOUT
SHELL SIZE 5 (78 POSITION)

1. FOR RECOMMENDED P.C. BOARD LAYOUT. TRUE POSITION TOLERANCE FOR P.C. BOARD LAYOUT IS .010 [0.25] AT MAX MATERIAL CONDITION.
2. THIS CONNECTOR ASSEMBLY MEETS THE REQUIREMENTS OF MIL–C–24308 AND MATES WITH ANY RECEPTACLE WITH SAME INSERT ARRANGEMENT.

3. MARKED WITH .047–.062 [1.19–1.57] HIGH CHARACTERS.
FAR SIDE REFERS TO THE WIDE SIDE OF THE KEYSTONE.
NEAR SIDE REFERS TO THE NARROW SIDE OF THE KEYSTONE.
IF THE FRONT SHELL IS TOO SMALL FOR "AMP", AMP PART NUMBER AND DATE CODE, THEN THE MARKING IS SPLIT AS FOLLOWS:
   A. AMP PART NUMBER ON REAR SHELL, FAR SIDE.
   B. "AMP" AND DATE CODE ON FRONT SHELL, FAR SIDE.

4. REQUIREMENT FOR FULL PIN DIAMETER EXTENSION: .155 [3.94] MIN FOR SHELL SIZE 5.
5. UL/CSA DESIGNATION STAMPED IN THIS AREA.
6. REPLACEMENT CONTACT PART NO.: 207683–2
7. FINISH: CADMIUM PER QQ–416.
8. FINISH: FINISH: ZINC PLATED PER ASTM–B–633 .000200–.000400 THK WITH SUPPLEMENTARY CHROMATE (Cr3+).

	DIM L	DIM J	DIM H	DIM G	DIM F	DIM E	DIM D	DIM C	DIM B	DIM A	NO OF POSITIONS	MARKED AMP P/N	SHELL SIZE	PART NUMBER
8	.039±010 [0.99±0.25]	.534±.010 [13.56±0.25]	2.178±010 [55.32±0.25]	.230±.006 [5.84±0.15]	.426±.010 [10.82±0.25]	.605±.015 [15.37±0.38]	.436 [11.07]	2.406 [61.11]	2.079 [52.81]	2.635±015 [66.93±0.38]	78	211595–1	5	5–211595–1
7	.039±010 [0.99±0.25]	.534±.010 [13.56±0.25]	2.178±010 [55.32±0.25]	.230±.006 [5.84±0.15]	.426±.010 [10.82±0.25]	.605±.015 [15.37±0.38]	.436 [11.07]	2.406 [61.11]	2.079 [52.81]	2.635±015 [66.93±0.38]	78	211595–1	5	211595–1

THIS DRAWING IS A CONTROLLED DOCUMENT.

DIMENSIONS: INCHES

TOLERANCES UNLESS OTHERWISE SPECIFIED:
0 PLC ± –
1 PLC ± –
2 PLC ± –
3 PLC ± .005 [0.13]
4 PLC ± –
ANGLES ± 0° 30'

MATERIAL: SEE CALLOUTS
FINISH: SEE CALLOUTS

DWN C.C.THOMAS 8–7–01
CHK CHAD BAKER 8–7–01
APVD CHAD BAKER 8–7–01
PRODUCT SPEC —
APPLICATION SPEC —
WEIGHT —

tyco Electronics
Tyco Electronics Corporation
Harrisburg, PA 17105–3608

NAME: HDD22 POSTED PLUG ASSY SIZE 5,78 POSN.,AMPLIMITE

SIZE A1 | CAGE CODE 00779 | DRAWING NO C–211595 | RESTRICTED TO —

CUSTOMER DRAWING | SCALE 4:1 | SHEET 1 OF 1 | REV F

AMP 4805 REV 31MAR2000

03FEB2006 1:31pm us0t8845 H:\ChuckThomas\211595_1–c.dwg