THIS DRAWING IS UNPUBLISHED. RELEASED FOR PUBLICATION -,- .
© COPYRIGHT - By - ALL RIGHTS RESERVED.

PART NO.	POS NO.	A	B	C	D	E	F	G	TOOLING STATUS
2023344-3	40	19.5	20.3	22.56	20.20	20.55	21	26	AVAILABLE
2023344-2	30	14.5	15.3	17.56	15.20	15.55	16	21	AVAILABLE
2023344-1	20	9.5	10.3	12.56	10.20	10.55	11	16	NOT AVAILABLE

LOC	DIST
J	—

REVISIONS 変更

P	LTR	DESCRIPTION	DATE	DWN	APVD
	C	REVISED	23JUN2011	Y.S	I.I

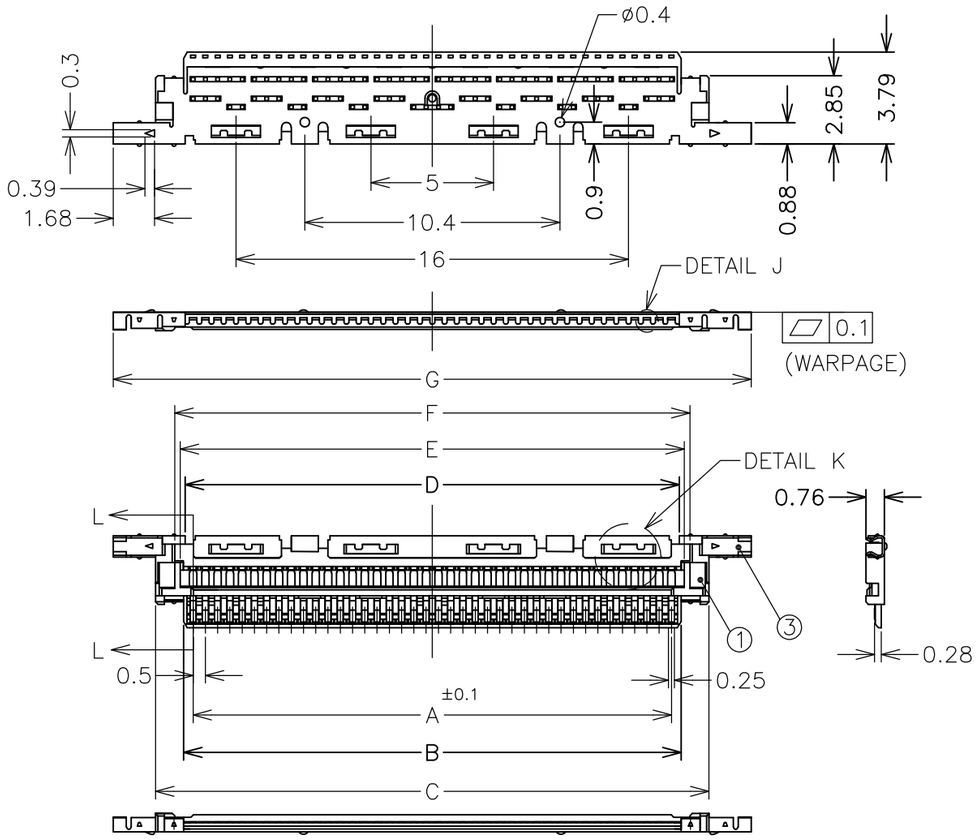

-3(40P): AS SHOWN

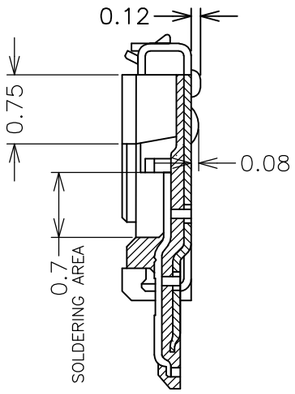

L-L
(SCALE 15:1)

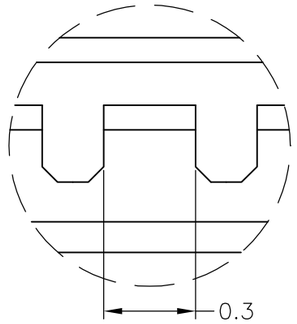

DETAIL J
(SCALE 50:1)

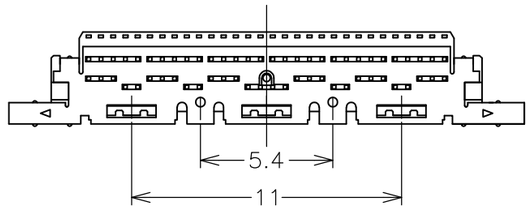

-2(30P): AS SHOWN

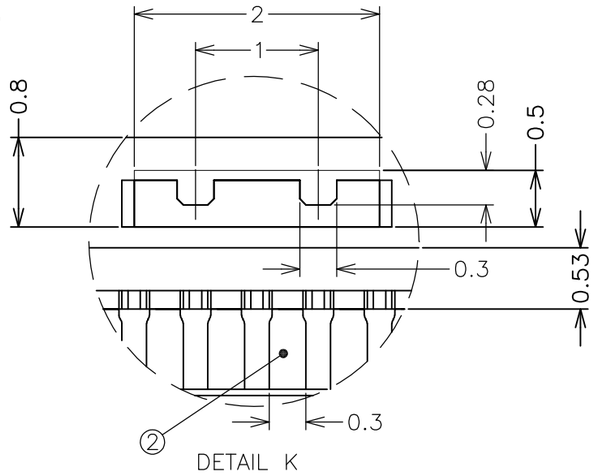

DETAIL K
(SCALE 20:1)

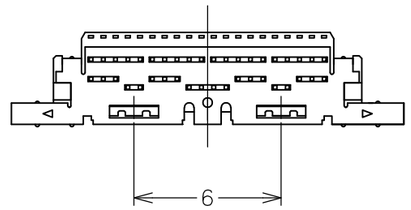

-1(20P): AS SHOWN

ITEM	PART NAME	MATERIAL & FINISH 1
3	LOWER SHELL	COPPER ALLOY, Au OVER Ni
2	CONTACT	COPPER ALLOY, Au OVER Ni
1	HOUSING	HIGH TEMP. THERMOPLASTIC, UL94V-0, BLACK

2

GENERAL TOLERANCE	
6 MAX.	±0.2
6 OVER MAX. 30	±0.3
30 OVER MAX. 120	±0.5
ANGLE	±2°

THIS DRAWING IS A CONTROLLED DOCUMENT.

DIMENSIONS: 単位：粍 mm

TOLERANCES UNLESS OTHERWISE SPECIFIED: 一般公差
0 PLC ±-
1 PLC ±-
2 PLC ±-
3 PLC ±-
4 PLC ±-
ANGLES ±-
2

MATERIAL 材料 1
FINISH 仕上 1

DWN Y.SHINO 18SEP2009
CHK S.KAJINUMA 18SEP2009
APVD S.KAJINUMA 18SEP2009
PRODUCT SPEC 製品規格 108-78659
APPLICATION SPEC 取付適用規格 114-5456
WEIGHT —

TE Connectivity

NAME 名称: LCD COAXIAL EMBEDDED DISPLAY INTERFACE (LCEDI) 0.5mm PITCH CONNECTOR PLUG HSG ASSY

SIZE A3 | CAGE CODE 00779 | DRAWING NO 番号 C-2023344 | RESTRICTED TO —

CUSTOMER DRAWING | SCALE 尺度 4:1 | SHEET 1 OF 1 | REV C

1470-19 (3/11)