THIS DRAWING IS UNPUBLISHED. RELEASED FOR PUBLICATION -,- .
© COPYRIGHT - BY TYCO ELECTRONICS CORPORATION. ALL INTERNATIONAL RIGHTS RESERVED.

LOC	DIST
AF	50

REVISIONS

P	LTR	DESCRIPTION	DATE	DWN	APVD
	M	REVISED PER ECR-08-008189	24NOV08	HMR	DD

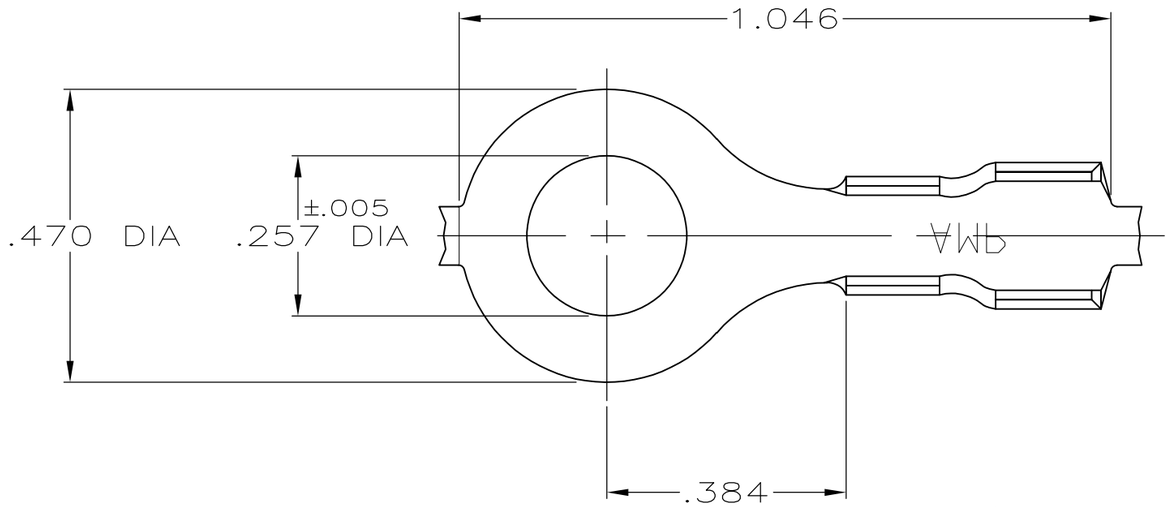

1 CONTINUOUS STRIP ON REELS

2 TIN PLATING.

3 P/N 42751-5 REELED WITH INTERLEAF PAPER.

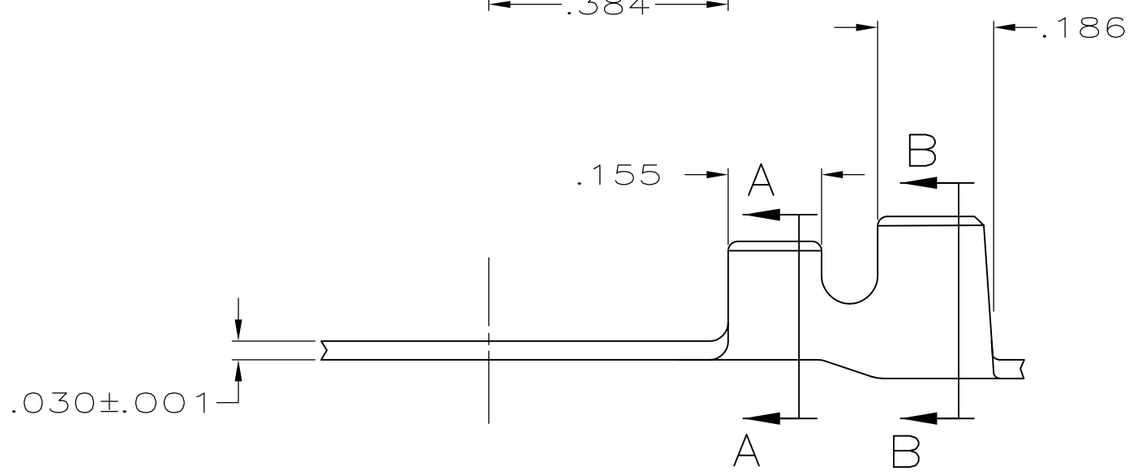

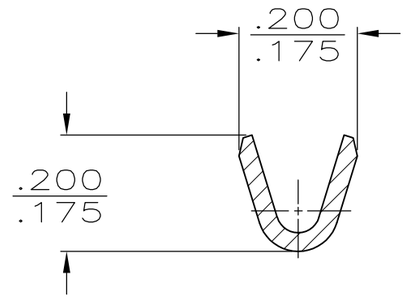

SECTION A-A

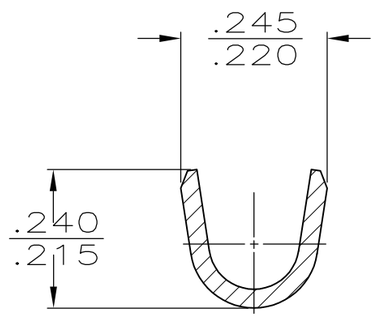

SECTION B-B

MATERIAL	FINISH	INSULATION RANGE	WIRE SIZE	PART NO.
#2 HARD BRASS	-	.120-.180 DIA	16-14 AWG	3 42751-5
1/4 HARD PHOS BRONZE	-			42751-3
#2 HARD BRASS	2			42751-2
#2 HARD BRASS	-			42751-1

TYPE	WIDTH	STRIP LENGTH ±.015	TYPE	WIDTH	±.002 HEIGHT	WIRE
F or O	.210	.220	F	.155	.087	14
					.081	16
INSUL BARREL CRIMP		WIRE BARREL CRIMP				

THIS DRAWING IS A CONTROLLED DOCUMENT.

DIMENSIONS: INCHES

TOLERANCES UNLESS OTHERWISE SPECIFIED:
0 PLC ± -
1 PLC ± -
2 PLC ± -
3 PLC ± .015
4 PLC ± -
ANGLES ± -

MATERIAL: SEE TABLE

FINISH: SEE TABLE

DWN P FORTNEY 4/16/90
CHK JR RUTH 4/16/90
APVD G YETTER 4/16/90
PRODUCT SPEC —
APPLICATION SPEC —
WEIGHT —

Tyco Electronics

Tyco Electronics Corporation
Harrisburg, PA 17105-3608

NAME: RING

SIZE	CAGE CODE	DRAWING NO	RESTRICTED TO
A3	00779	C-42751	—

CUSTOMER DRAWING

SCALE 4:1 SHEET 1 OF 1 REV M