© Seiko Instruments Inc., 2004-2010 Rev.3.0_00

The S-1167 Series is a positive voltage regulator with ultra low current consumption, high ripple rejection, low drop voltage and high output voltage accuracy developed based on CMOS technology.
Although current consumption is very small with 9 μA typ., S-1167 Series realized the 70 dB of high ripple rejection rate. Besides a 1.0 μF ceramic capacitor is available as an input-and-output capacitor.
Moreover, dropout voltage is also small since output voltage accuracy realizes ±1.0% of high accuracy, and the low-on-resistance transistor is built-in. A built-in Output current protector prevents the load current from exceeding the current capacitance of the output transistor. A shutdown circuit ensures long battery life.
Two packages, SOT-23-5 and SNT-6A(H), are available.
Compared with the voltage regulators using the conventional CMOS process, S-1167 Series is the most suitable for the portable equipments with ultra low current consumption and corresponding to the small package.

■ Features

- Output voltage : 1.5 to 5.5 V, selectable in 0.1 V steps.
- Low equivalent series resistance capacitor can be used : A ceramic capacitor of 1.0 μF or more can be used for the output capacitor.
- Wide input voltage range : 2.0 to 6.5 V
- High-accuracy output voltage : ±1.0%
- Low dropout voltage : 150 mV typ. (3.0 V output product, at I_{OUT} = 100 mA)
- Low current consumption : During operation : 9 μA typ., 16 μA max.
  During shutdown : 0.1 μA typ., 0.9 μA max.
- High peak current capacity : 150 mA output is possible. (at $V_{IN} \geq V_{OUT(S)} + 1.0$ V)*1
- High ripple rejection : 70 dB typ. (at 1.0 kHz, V_{OUT} = 3.0 V)
- Built-in overcurrent protector : Overcurrent of output transistor can be restricted.
- Built-in shutdown circuit : Ensures long battery life.
- Lead-free, Sn 100%, halogen-free*2

***1.** Attention should be paid to the power dissipation of the package when the output current is large.
***2.** Refer to "■ **Product Name Structure**" for details.

■ Applications

- Power supply for battery-powered devices
- Power supply for cellular phones
- Power supply for portable equipments

■ Packages

- SOT-23-5
- SNT-6A(H)

■ Block Diagram

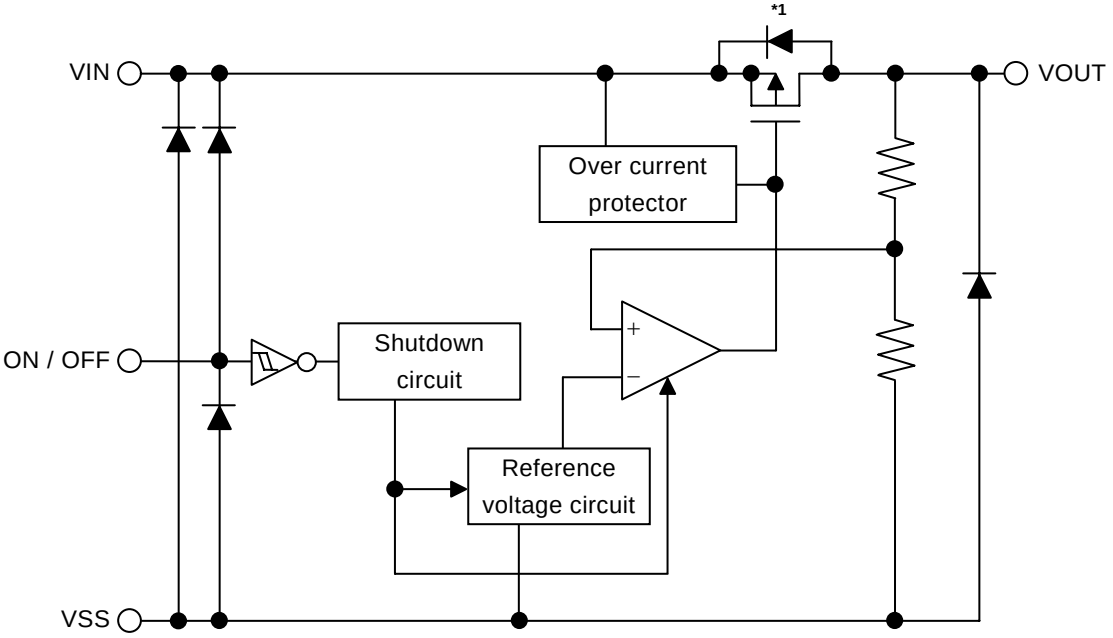

***1.** Parasitic diode

Figure 1

■ Product Name Structure

The product types, output voltage value and package types for the S-1167 Series can be selected at the user's request. Refer to the "**1. Product Name**" for the meanings of the characters in the product name, "**2. Package**" regarding the package drawings and "**3. Product Name List**" for the full product names.

1. Product Name

S-1167 x xx - xxxx x

Environmental code
- U : Lead-free (Sn 100%), halogen-free
- G : Lead-free (for details, please contact our sales office)

Package name (abbreviation) and packing specifications*1
- M5T1 : SOT-23-5, Tape
- I6T2 : SNT-6A(H), Tape

Output voltage
- 15 to 55
- (e.g. When output voltage is 1.5 V, it is expressed as 15.)

Product type *2
- A : ON / OFF pin negative logic
- B : ON / OFF pin positive logic

***1.** Refer to the tape specifications.
***2.** Refer to the "**3. Shutdown (ON / OFF Pin)**" in the "**■ Operation**".

2. Package

Package Name	Drawing Code			
	Package	Tape	Reel	Land
SOT-23-5	MP005-A-P-SD	MP005-A-C-SD	MP005-A-R-SD	–
SNT-6A(H)	PI006-A-P-SD	PI006-A-C-SD	PI006-A-R-SD	PI006-A-L-SD

3. Product Name List

3.1 S-1167 Series A type

Table 1

Output Voltage	SOT-23-5
1.5 V±1.0%	S-1167A15-M5T1x
1.85 V±1.0%	S-1167A1J-M5T1x
1.9 V±1.0%	S-1167A19-M5T1x
3.0 V±1.0%	S-1167A30-M5T1x
3.3 V±1.0%	S-1167A33-M5T1x
5.0 V±1.0%	S-1167A50-M5T1x

Remark 1. Please contact our sales office for the products other than those above.
2. x: G or U
3. Please select products of environmental code = U for Sn 100%, halogen-free products.

3.2 S-1167 Series B type

Table 2

Output Voltage	SOT-23-5	SNT-6A(H)
1.5 V±1.0%	S-1167B15-M5T1x	S-1167B15-I6T2x
1.6 V±1.0%	S-1167B16-M5T1x	S-1167B16-I6T2x
1.7 V±1.0%	S-1167B17-M5T1x	S-1167B17-I6T2x
1.8 V±1.0%	S-1167B18-M5T1x	S-1167B18-I6T2x
1.9 V±1.0%	S-1167B19-M5T1x	S-1167B19-I6T2x
2.0 V±1.0%	S-1167B20-M5T1x	S-1167B20-I6T2x
2.1 V±1.0%	S-1167B21-M5T1x	S-1167B21-I6T2x
2.2 V±1.0%	S-1167B22-M5T1x	S-1167B22-I6T2x
2.3 V±1.0%	S-1167B23-M5T1x	S-1167B23-I6T2x
2.4 V±1.0%	S-1167B24-M5T1x	S-1167B24-I6T2x
2.5 V±1.0%	S-1167B25-M5T1x	S-1167B25-I6T2x
2.6 V±1.0%	S-1167B26-M5T1x	S-1167B26-I6T2x
2.7 V±1.0%	S-1167B27-M5T1x	S-1167B27-I6T2x
2.8 V±1.0%	S-1167B28-M5T1x	S-1167B28-I6T2x
2.9 V±1.0%	S-1167B29-M5T1x	S-1167B29-I6T2x
3.0 V±1.0%	S-1167B30-M5T1x	S-1167B30-I6T2x
3.1 V±1.0%	S-1167B31-M5T1x	S-1167B31-I6T2x
3.2 V±1.0%	S-1167B32-M5T1x	S-1167B32-I6T2x
3.3 V±1.0%	S-1167B33-M5T1x	S-1167B33-I6T2x
3.4 V±1.0%	S-1167B34-M5T1x	S-1167B34-I6T2x
3.5 V±1.0%	S-1167B35-M5T1x	S-1167B35-I6T2x
3.6 V±1.0%	S-1167B36-M5T1x	S-1167B36-I6T2x
3.7 V±1.0%	S-1167B37-M5T1x	S-1167B37-I6T2x
3.8 V±1.0%	S-1167B38-M5T1x	S-1167B38-I6T2x
3.9 V±1.0%	S-1167B39-M5T1x	S-1167B39-I6T2x
4.0 V±1.0%	S-1167B40-M5T1x	S-1167B40-I6T2x
4.1 V±1.0%	S-1167B41-M5T1x	S-1167B41-I6T2x
4.2 V±1.0%	S-1167B42-M5T1x	S-1167B42-I6T2x
4.3 V±1.0%	S-1167B43-M5T1x	S-1167B43-I6T2x
4.4 V±1.0%	S-1167B44-M5T1x	S-1167B44-I6T2x
4.5 V±1.0%	S-1167B45-M5T1x	S-1167B45-I6T2x
4.6 V±1.0%	S-1167B46-M5T1x	S-1167B46-I6T2x
4.7 V±1.0%	S-1167B47-M5T1x	S-1167B47-I6T2x
4.8 V±1.0%	S-1167B48-M5T1x	S-1167B48-I6T2x
4.9 V±1.0%	S-1167B49-M5T1x	S-1167B49-I6T2x
5.0 V±1.0%	S-1167B50-M5T1x	S-1167B50-I6T2x
5.1 V±1.0%	S-1167B51-M5T1x	S-1167B51-I6T2x
5.2 V±1.0%	S-1167B52-M5T1x	S-1167B52-I6T2x
5.3 V±1.0%	S-1167B53-M5T1x	S-1167B53-I6T2x
5.4 V±1.0%	S-1167B54-M5T1x	S-1167B54-I6T2x
5.5 V±1.0%	S-1167B55-M5T1x	S-1167B55-I6T2x

Remark 1. Please contact our sales office for the products other than those above.
2. x: G or U
3. Please select products of environmental code = U for Sn 100%, halogen-free products.

■ Pin Configurations

SOT-23-5
Top view

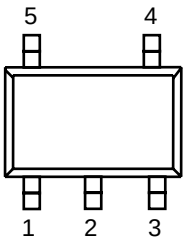

Figure 2

Table 3

Pin No.	Symbol	Pin Description
1	VIN	Input voltage pin
2	VSS	GND pin
3	ON / OFF	Shutdown pin
4	NC *1	No connection
5	VOUT	Output voltage pin

***1.** The NC pin is electrically open.
The NC pin can be connected to VIN or VSS.

SNT-6A(H)
Top view

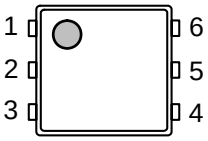

Figure 3

Table 4

Pin No.	Symbol	Pin Description
1	VOUT	Output voltage pin
2	VSS	GND pin
3	NC *1	No connection
4	ON / OFF	Shutdown pin
5	VSS	GND pin
6	VIN	Input voltage pin

***1.** The NC pin is electrically open.
The NC pin can be connected to VIN or VSS.

■ Absolute Maximum Ratings

Table 5

(Ta = 25°C unless otherwise specified)

Item		Symbol	Absolute Maximum Rating	Unit
Input voltage		V_{IN}	V_{SS} − 0.3 to V_{SS} + 7	V
		$V_{ON / OFF}$	V_{SS} − 0.3 to V_{IN} + 0.3	V
Output voltage		V_{OUT}	V_{SS} − 0.3 to V_{IN} + 0.3	V
Power dissipation	SOT-23-5	P_D	300 (When not mounted on board)	mW
			600 *1	mW
	SNT-6A(H)		500 *1	mW
Operating ambient temperature		T_{opr}	−40 to +85	°C
Storage temperature		T_{stg}	−40 to +125	°C

***1.** When mounted on board
[Mounted board]
(1) Board size : 114.3 mm × 76.2 mm × t1.6 mm
(2) Board name : JEDEC STANDARD51-7

Caution The absolute maximum ratings are rated values exceeding which the product could suffer physical damage. These values must therefore not be exceeded under any conditions.

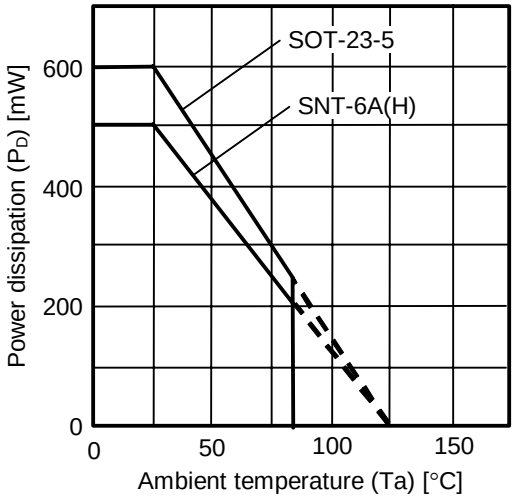

Figure 4 Power Dissipation of The Package (When Mounted on Board)

■ Electrical Characteristics

Table 6

(Ta = 25°C unless otherwise specified)

Item	Symbol	Condition		Min.	Typ.	Max.	Unit	Test Circuit
Output voltage *1	$V_{OUT(E)}$	$V_{IN} = V_{OUT(S)} + 1.0$ V, $I_{OUT} = 30$mA		$V_{OUT(S)} \times 0.99$	$V_{OUT(S)}$	$V_{OUT(S)} \times 1.01$	V	1
Output current *2	I_{OUT}	$V_{IN} \geq V_{OUT(S)} + 1.0$ V		150 *5	–	–	mA	3
Dropout voltage *3	V_{drop}	$I_{OUT} = 100$ mA	1.5 V ≤ $V_{OUT(S)}$ ≤ 1.9 V	0.5	0.54	0.58	V	1
			2.0 V ≤ $V_{OUT(S)}$ ≤ 2.4 V	–	0.23	0.35	V	1
			2.5 V ≤ $V_{OUT(S)}$ ≤ 2.9 V	–	0.20	0.30	V	1
			3.0 V ≤ $V_{OUT(S)}$ ≤ 3.2 V	–	0.15	0.23	V	1
			3.3 V ≤ $V_{OUT(S)}$ ≤ 5.5 V	–	0.14	0.21	V	1
Line regulation	$\frac{\Delta V_{OUT1}}{\Delta V_{IN} \bullet V_{OUT}}$	$V_{OUT(S)} + 0.5$ V ≤ V_{IN} ≤ 6.5 V, $I_{OUT} = 30$ mA		–	0.05	0.2	% / V	1
Load regulation	ΔV_{OUT2}	$V_{IN} = V_{OUT(S)} + 1.0$ V, 10 μA ≤ I_{OUT} ≤ 100 mA		–	20	40	mV	1
Output voltage temperature coefficient *4	$\frac{\Delta V_{OUT}}{\Delta Ta \bullet V_{OUT}}$	$V_{IN} = V_{OUT(S)} + 1.0$ V, $I_{OUT} = 30$ mA, –40 ≤ Ta ≤ 85 °C		–	±100	–	ppm / °C	1
Current consumption during operation	I_{SS1}	$V_{IN} = V_{OUT(S)} + 1.0$ V, ON / OFF pin = ON, No load		–	9	16	μA	2
Current consumption during shutdown	I_{SS2}	$V_{IN}=V_{OUT(S)} + 1.0$ V, ON / OFF pin = OFF, No load		–	0.1	0.9	μA	2
Input voltage	V_{IN}	–		2.0	–	6.5	V	–
ON / OFF pin input voltage "H"	V_{SH}	$V_{IN} = V_{OUT(S)} + 1.0$ V, $R_L = 1.0$ kΩ		1.5	–	–	V	4
ON / OFF pin input voltage "L"	V_{SL}	$V_{IN} = V_{OUT(S)} + 1.0$ V, $R_L = 1.0$ kΩ		–	–	0.3	V	4
ON / OFF pin input current "H"	I_{SH}	$V_{IN} = 6.5$ V, $V_{ON / OFF} = 6.5$ V		–0.1	–	0.1	μA	4
ON / OFF pin input current "L"	I_{SL}	$V_{IN} = 6.5$ V, $V_{ON / OFF} = 0$ V		–0.1	–	0.1	μA	4
Ripple rejection	$\lvert RR \rvert$	$V_{IN} = V_{OUT(S)} + 1.0$ V, f = 1.0 kHz, $\Delta V_{rip} = 0.5$ Vrms, $I_{OUT} = 30$ mA	1.5 V ≤ $V_{OUT(S)}$ ≤ 3.0 V	–	70	–	dB	5
			3.1 V ≤ $V_{OUT(S)}$ ≤ 5.5 V	–	65	–	dB	5
Short-circuit current	I_{SHORT}	$V_{IN} = V_{OUT(S)} + 1.0$ V, ON / OFF pin = ON, $V_{OUT} = 0$ V		–	300	–	mA	3

***1.** $V_{OUT(S)}$: Specified output voltage
$V_{OUT(E)}$: Actual output voltage at the fixed load
The output voltage when fixing I_{OUT}(= 30 mA) and inputting $V_{OUT(S)} + 1.0$ V

***2.** The output current at which the output voltage becomes 95% of $V_{OUT(E)}$ after gradually increasing the output current.

***3.** $V_{drop} = V_{IN1} - (V_{OUT3} \times 0.98)$
V_{OUT3} is the output voltage when $V_{IN} = V_{OUT(S)} + 1.0$ V and $I_{OUT} = 100$ mA.
V_{IN1} is the input voltage at which the output voltage becomes 98% of V_{OUT3} after gradually decreasing the input voltage.

***4.** The change in temperature [mV / °C] is calculated using the following equation.

$$\frac{\Delta V_{OUT}}{\Delta Ta}[\text{mV / °C}]^{*1} = V_{OUT(S)}[\text{V}]^{*2} \times \frac{\Delta V_{OUT}}{\Delta Ta \bullet V_{OUT}}[\text{ppm / °C}]^{*3} \div 1000$$

***1.** The temperature change ratio of the output voltage
***2.** Specified output voltage
***3.** Output voltage temperature coefficient

***5.** The output current can be supplied at least to this value.
Due to restrictions on the package power dissipation, this value may not be satisfied. Attention should be paid to the power dissipation of the package when the output current is large.
This specification is guaranteed by design.

■ Test Circuits

1.

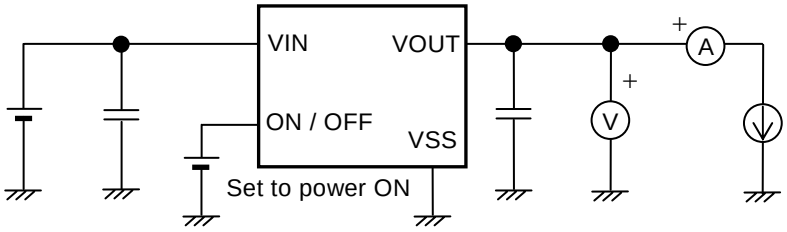

Figure 5

2.

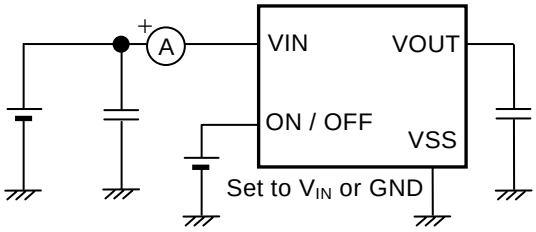

Figure 6

3.

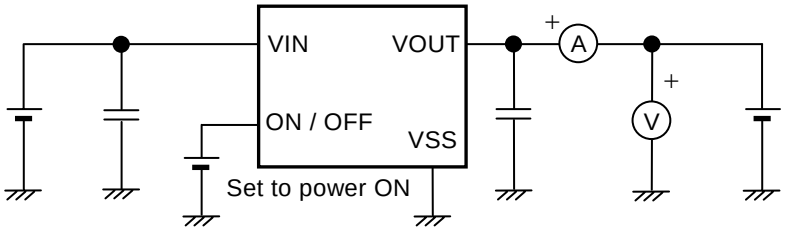

Figure 7

4.

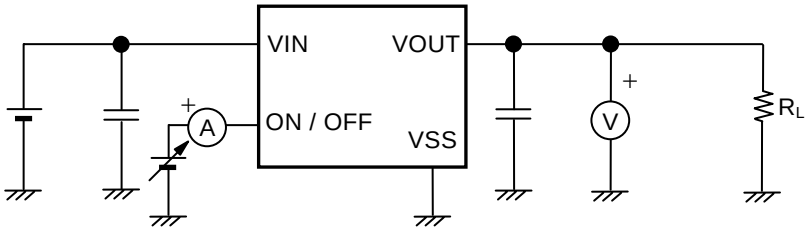

Figure 8

5.

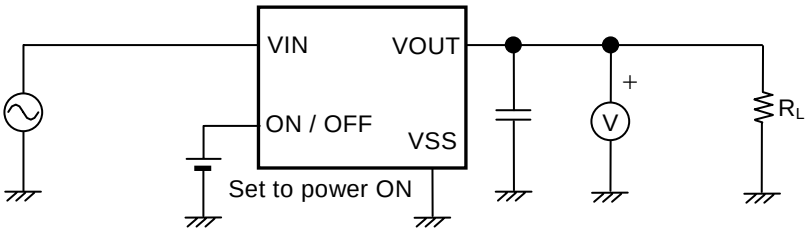

Figure 9

■ Standard Circuit

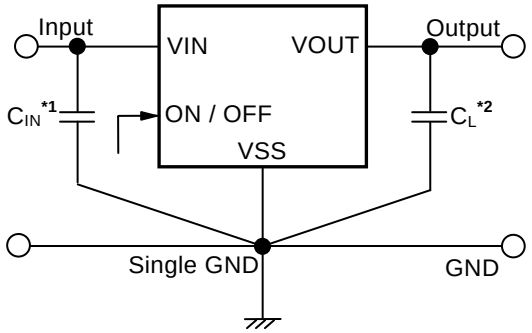

***1.** A capacitor for stabilizing the input.
***2.** A ceramic capacitor of 1.0 μF or more can be used.

Figure 10

Caution The above connection diagram and constant will not guarantee successful operation. Perform thorough evaluation using the actual application to set the constant.

■ Application Conditions

Input capacitor (C_{IN}) : 1.0 μF or more
Output capacitor (C_L) : 1.0 μF or more
Equivalent series resistance (R_{ESR}) of output capacitor : 1.0 Ω or less

Caution A general series regulator may oscillate, depending on the external components selected. Check that no oscillation occurs with the application using the above capacitor.

■ Selection of Input Capacitor (C_{IN}) and Output Capacitor (C_L)

The S-1167 Series requires an output capacitor between the VOUT pin and VSS pin for phase compensation. Operation is stabilized by a ceramic capacitor with an output capacitance of 1.0 μF or more in the entire temperature range. However, when using an OS capacitor, tantalum capacitor, or aluminum electrolytic capacitor, a ceramic capacitor with a capacitance of 1.0 μF or more and an equivalent series resistance (R_{ESR}) of 1.0 Ω or less is required.
The value of the output overshoot or undershoot transient response varies depending on the value of the output capacitor. The required capacitance of the input capacitor differs depending on the application.
The recommended value for an application is 1.0 μF or more for C_{IN} and 1.0 μF or more for C_L; however, when selecting the output capacitor, perform sufficient evaluation, including evaluation of temperature characteristics, on the actual device.

■ Technical Terms

1. Low Dropout Voltage Regulator

The low dropout voltage regulator is a voltage regulator whose dropout voltage is low due to its built-in low on-resistance transistor.

2. Low Equivalent Series Resistance

A capacitor whose equivalent series resistance (R_{ESR}) is low. The S-1167 Series enables use of a low equivalent series resistance capacitor, such as a ceramic capacitor, for the output-side capacitor (C_L). A capacitor whose R_{ESR} is 1.0 Ω or less can be used.

3. Output Voltage (V_{OUT})

The accuracy of the output voltage is ensured at ±1.0% under the specified conditions of fixed input voltage*1, fixed output current, and fixed temperature.

***1.** Differs depending on the product.

Caution If the above conditions change, the output voltage value may vary and exceed the accuracy range of the output voltage. Refer to the "Electrical Characteristics" and "Typical Characteristics" for details.

4. Line Regulation $\left(\frac{\Delta V_{OUT1}}{\Delta V_{IN} \bullet V_{OUT}}\right)$

Indicates the dependency of the output voltage on the input voltage. That is, the values show how much the output voltage changes due to a change in the input voltage with the output current remaining unchanged.

5. Load Regulation (ΔV_{OUT2})

Indicates the dependency of the output voltage on the output current. That is, the values show how much the output voltage changes due to a change in the output current with the input voltage remaining unchanged.

6. Dropout Voltage (V_{drop})

Indicates the difference between the input voltage (V_{IN1}), which is the input voltage (V_{IN}) at the point where the output voltage has fallen to 98% of the output voltage value (V_{OUT3}) after V_{IN} was gradually decreased from $V_{IN} = V_{OUT(S)} + 1.0$ V, and the output voltage at that point ($V_{OUT3} \times 0.98$).

$V_{drop} = V_{IN1} - (V_{OUT3} \times 0.98)$

7. Temperature Coefficient of Output Voltage $\left(\frac{\Delta V_{OUT}}{\Delta Ta \bullet V_{OUT}}\right)$

The shadowed area in **Figure 11** is the range where V_{OUT} varies in the operating temperature range when the temperature coefficient of the output voltage is ±100 ppm / °C.

e.g. S-1167B28 Typ.

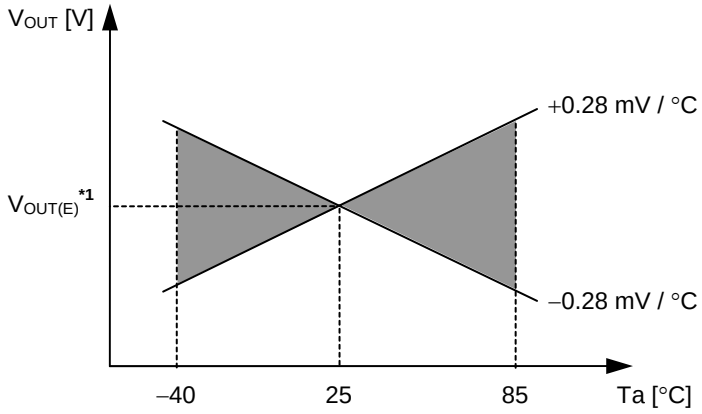

***1.** $V_{OUT(E)}$ is the value of the output voltage measured at 25°C.

Figure 11

A change in the temperature of the output voltage [mV/°C] is calculated using the following equation.

$$\frac{\Delta V_{OUT}}{\Delta Ta}[mV/°C]^{*1} = V_{OUT(S)}[V]^{*2} \times \frac{\Delta V_{OUT}}{\Delta Ta \bullet V_{OUT}}[ppm/°C]^{*3} \div 1000$$

***1.** The temperature change ratio of the output voltage
***2.** Specified output voltage
***3.** Output voltage temperature coefficient

■ Operation

1. Basic Operation

Figure 12 shows the block diagram of the S-1167 Series.
The error amplifier compares the reference voltage (V_{ref}) with V_{fb}, which is the output voltage resistance-divided by feedback resistors R_s and R_f. It supplies the output transistor with the gate voltage necessary to ensure a certain output voltage free of any fluctuations of input voltage and temperature.

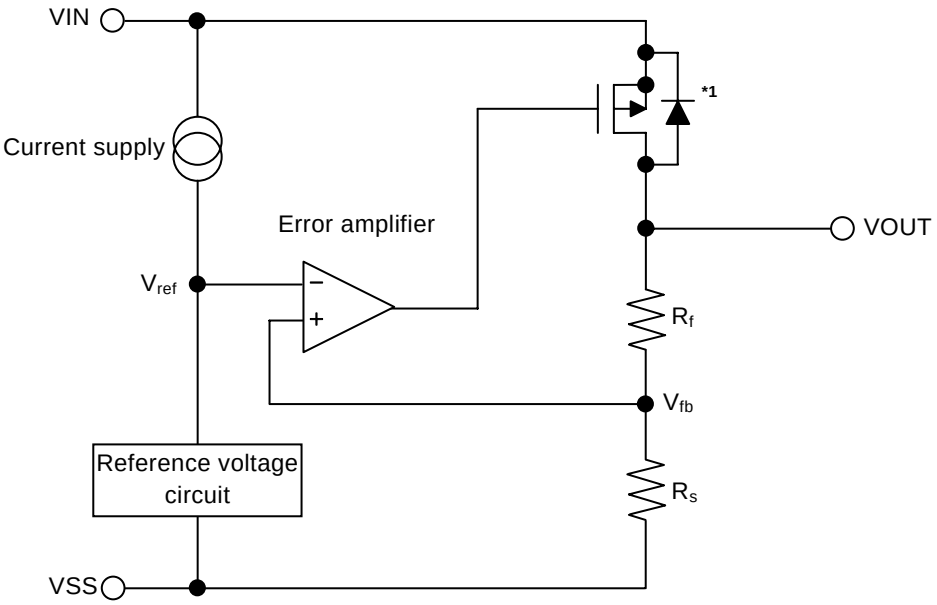

***1. Parasitic diode**

Figure 12

2. Output Transistor

The S-1167 Series uses a low on-resistance P-channel MOS FET as the output transistor.
Be sure that V_{OUT} does not exceed V_{IN} + 0.3 V to prevent the voltage regulator from being damaged due to inverse current flowing from the VOUT pin through a parasitic diode to the VIN pin.

3. Shutdown Pin (ON / OFF Pin)

This pin starts and stops the regulator.
When the ON / OFF pin is set to the shutdown level, the operation of all internal circuits stops, and the built-in P-channel MOS FET output transistor between the VIN pin and VOUT pin is turned off to substantially reduce the current consumption. The VOUT pin becomes the V_{SS} level due to the internally divided resistance of several MΩ between the VOUT pin and VSS pin.
The structure of the ON / OFF pin is as shown in **Figure 13**. Since the ON / OFF pin is neither pulled down nor pulled up internally, do not use it in the floating state. In addition, note that the current consumption increases if a voltage of 0.3 V to V_{IN} − 0.3 V is applied to the ON / OFF pin. When the ON / OFF pin is not used, connect it to the VSS pin if the product type is "A" and to the VIN pin if it is "B".

Table 7

Product Type	ON / OFF Pin	Internal Circuit	VOUT Pin Voltage	Current Consumption
A	"L" : Power on	Operaing	Set value	I_{SS1}
A	"H" : Power off	Stopped	V_{SS} level	I_{SS2}
B	"L" : Power off	Stopped	V_{SS} level	I_{SS2}
B	"H" : Power on	Operaing	Set value	I_{SS1}

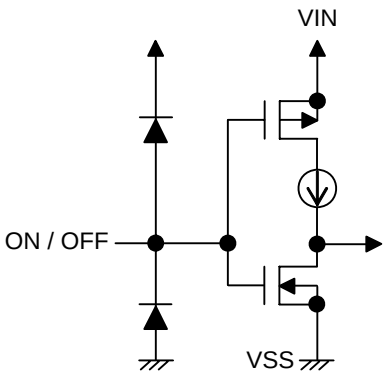

Figure 13

■ Precautions

- Wiring patterns for the VIN pin, VOUT pin and GND pin should be designed so that the impedance is low. When mounting an output capacitor between the VOUT pin and VSS pin (C_L) and a capacitor for stabilizing the input between VIN pin and VSS pin (C_{IN}), the distance from the capacitors to these pins should be as short as possible.
- Note that the output voltage may increase when a series regulator is used at low load current (10 μA or less).
- Note that the output voltage may increase due to driver leakage when a series regulator is used at high temperatures.
- Generally a series regulator may cause oscillation, depending on the selection of external parts. The following conditions are recommended for this IC. However, be sure to perform sufficient evaluation under the actual usage conditions for selection, including evaluation of temperature characteristics.
  Input capacitor (C_{IN}) : 1.0 μF or more
  Output capacitor (C_L) : 1.0 μF or more
  Equivalent series resistance (R_{ESR}) : 1.0 Ω or less
- The voltage regulator may oscillate when the impedance of the power supply is high and the input capacitor is small or an input capacitor is not connected.
- It is important to sufficiently evaluate the output voltage fluctuation due to the power supply fluctuation and load fluctuation characteristics in the actual equipment.
- If the power supply suddenly increases sharply, a momentary overshoot may be output. It is therefore important to sufficiently evaluate the output voltage at power application in the actual equipment.
- The application conditions for the input voltage, output voltage, and load current should not exceed the package power dissipation.
- Do not apply an electrostatic discharge to this IC that exceeds the performance ratings of the built-in electrostatic protection circuit.
- In determining the output current, attention should be paid to the output current value specified in **Table 6** in the "■ **Electrical Characteristics**" and footnote ***5** of the table.
- SII claims no responsibility for any disputes arising out of or in connection with any infringement by products including this IC of patents owned by a third party.

■ Characteristics (Typical Data)

(1) Output Voltage vs. Output Current (When Load Current Increases) (Ta = 25°C)

S-1167B15

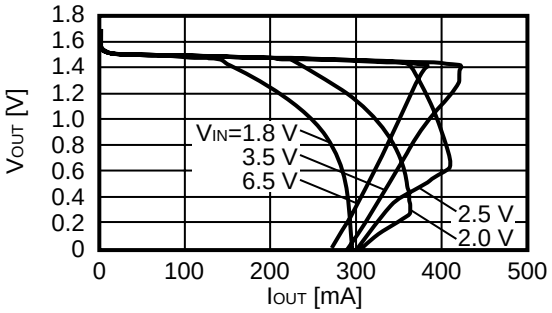

S-1167B30

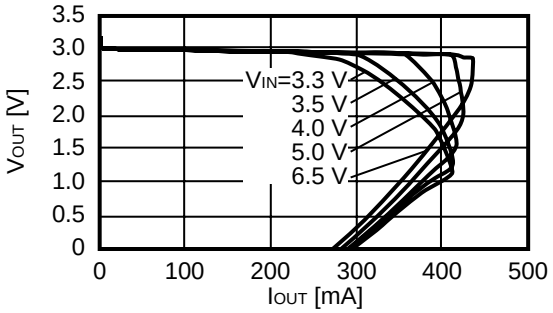

S-1167B50

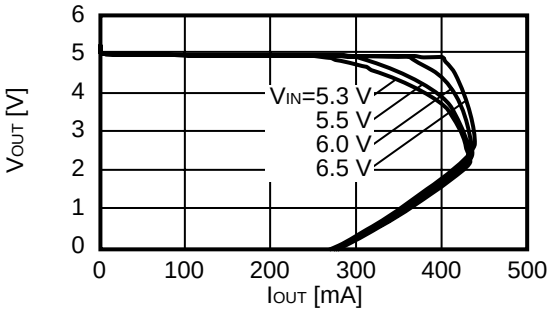

Remark In determining the output current, attention should be paid to the following.

1. The minimum output current value and footnote ***5** specified in **Table 6** in the "■ **Electrical Characteristics**"
2. The package power dissipation

(2) Output Voltage vs. Input Voltage (Ta = 25°C)

S-1167B15

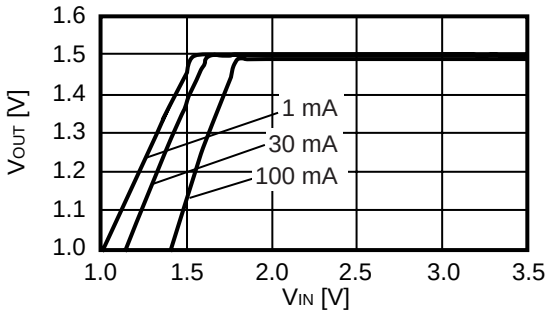

S-1167B30

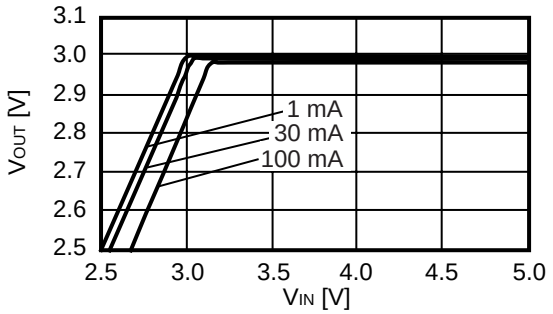

S-1167B50

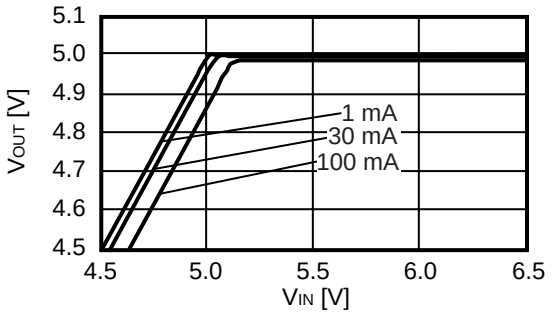

(3) Dropout Voltage vs. Output Current

S-1167B15

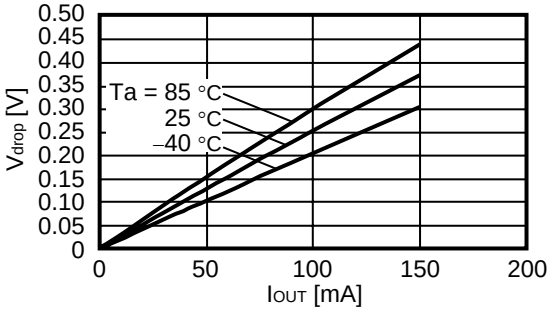

S-1167B30

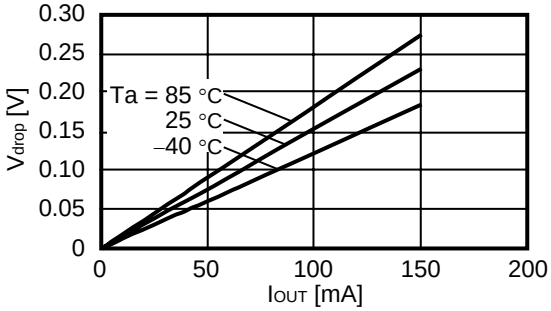

S-1167B50

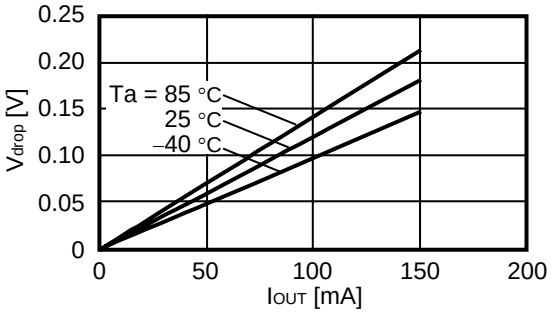

(4) Dropout Voltage vs. Set Output Voltage

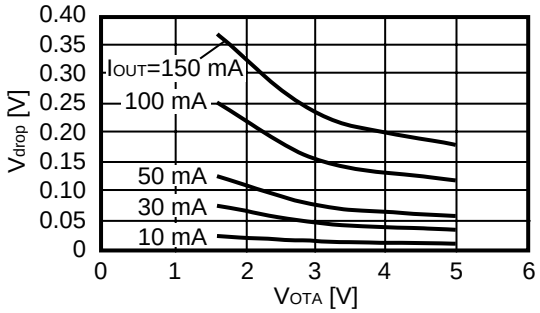

(5) Output Voltage vs. Ambient Temperature

S-1167B15

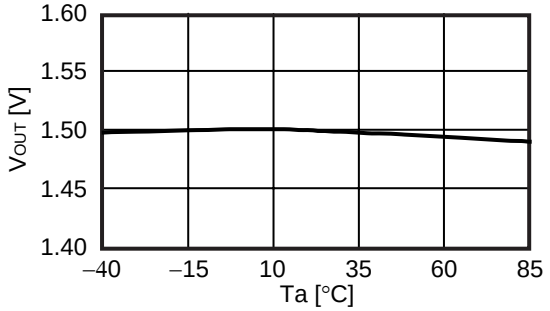

S-1167B30

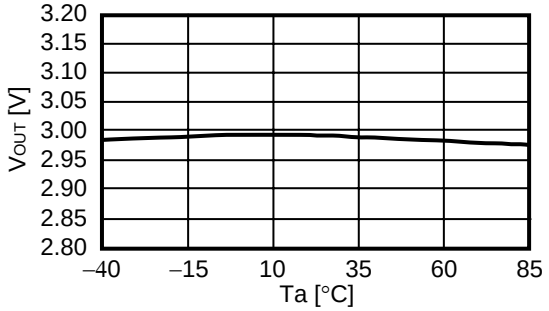

S-1167B50

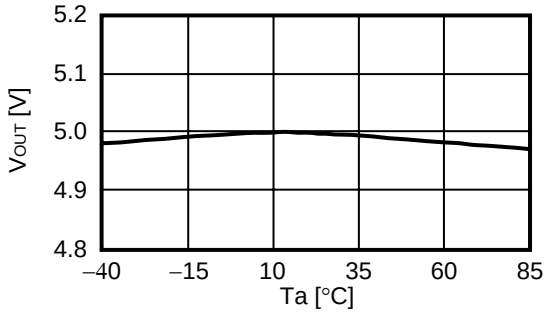

(6) Current Consumption vs. Input Voltage

S-1167B15

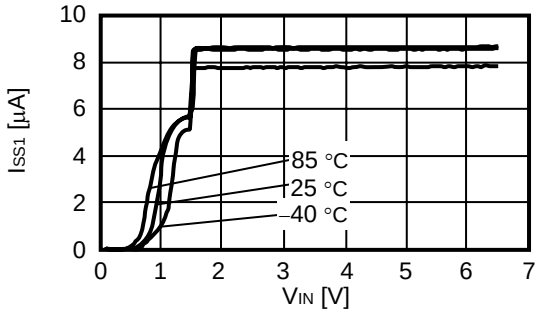

S-1167B30

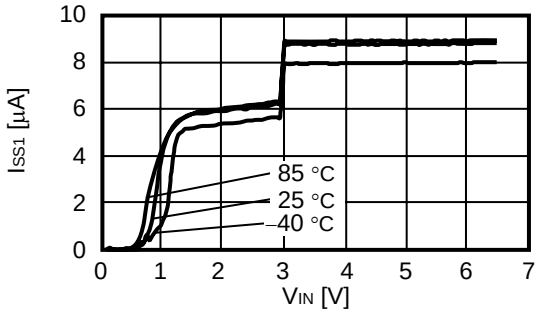

S-1167B50

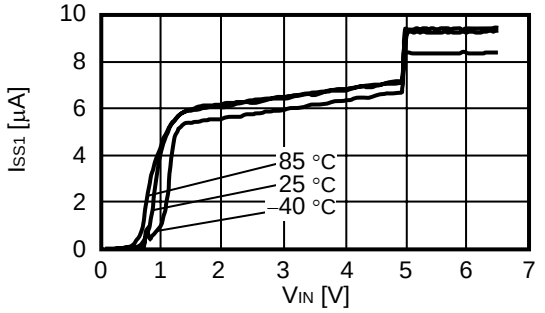

(7) Ripple Rejection (Ta = 25°C)

S-1167B15

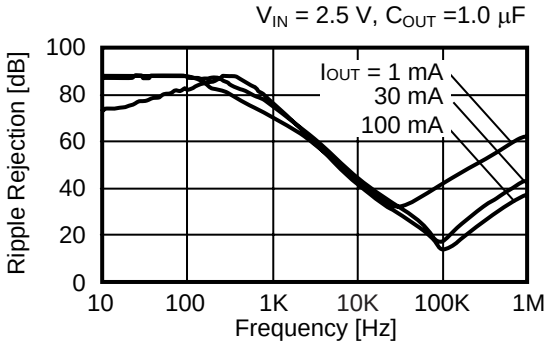

S-1167B30

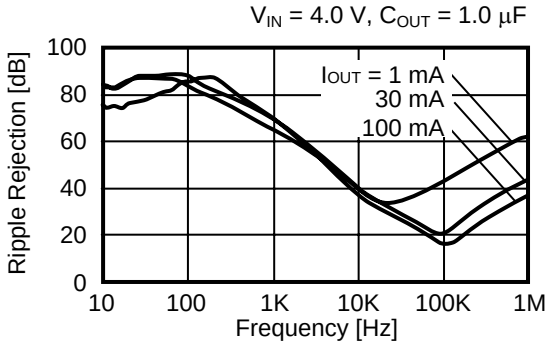

S-1167B50

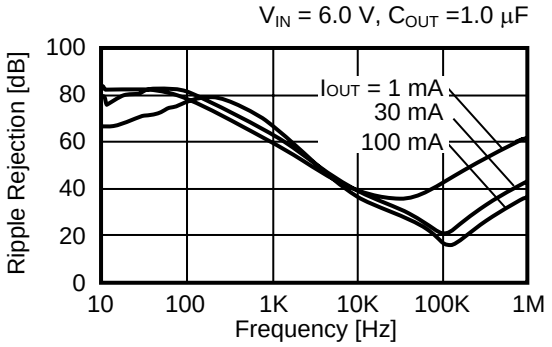

■ Reference Data

(1) Input Transient Response Characteristics (Ta = 25°C)

S-1167B15

I_{OUT} = 30 mA, tr = tf = 5.0 μs, C_{OUT} =1.0 μF, C_{IN} = 1.0 μF

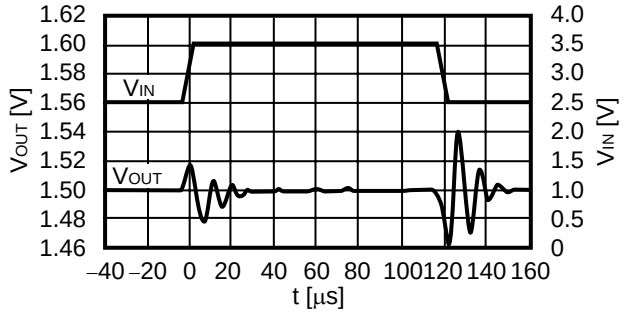

S-1167B30

I_{OUT} = 30 mA, tr = tf = 5.0 μs, C_{OUT} = 1.0 μF, C_{IN} = 1.0 μF

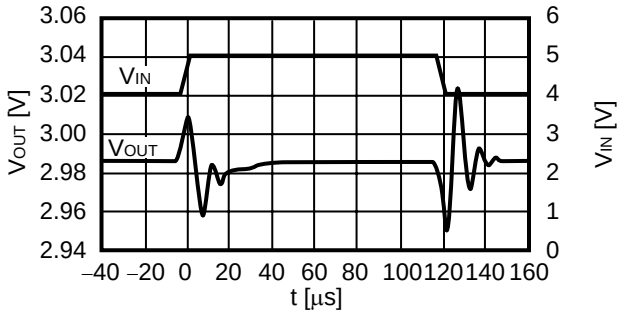

S-1167B50

I_{OUT} = 30 mA, tr = tf = 5.0 μs, C_{OUT} =1.0 μF, C_{IN} = 1.0 μF

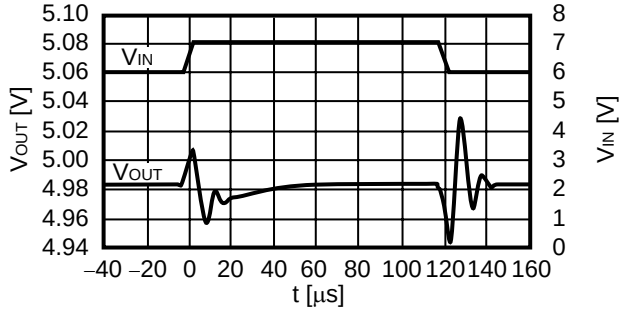

(2) Load Transient Response Characteristics (Ta = 25°C)

S-1167B15

V_{IN} = 2.5 V, C_{OUT} = 1.0 μF, C_{IN} = 1.0 μF, I_{OUT} = 50 ↔ 100 mA

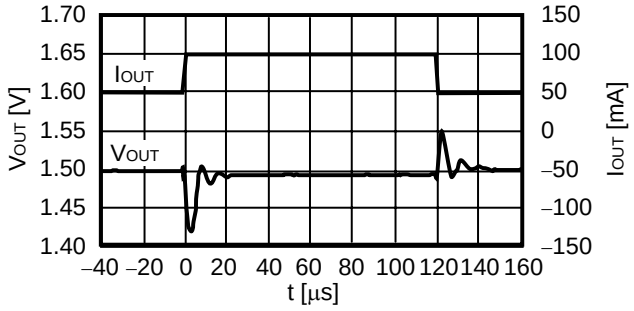

S-1167B30

V_{IN} = 4.0 V, C_{OUT} = 1.0 μF, C_{IN} = 1.0 μF, I_{OUT} = 50 ↔ 100 mA

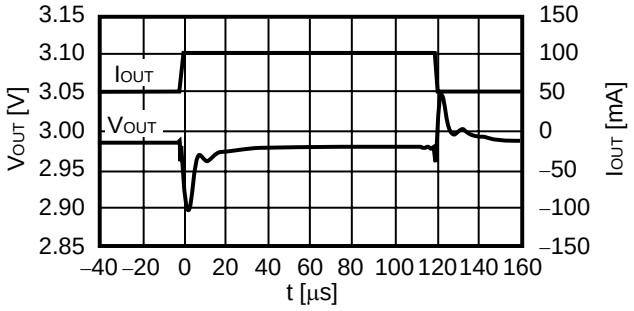

S-1167B50

V_{IN} =6.0 V, C_{OUT} = 1.0 μF, C_{IN} = 1.0 μF, I_{OUT} = 50 ↔ 100 mA

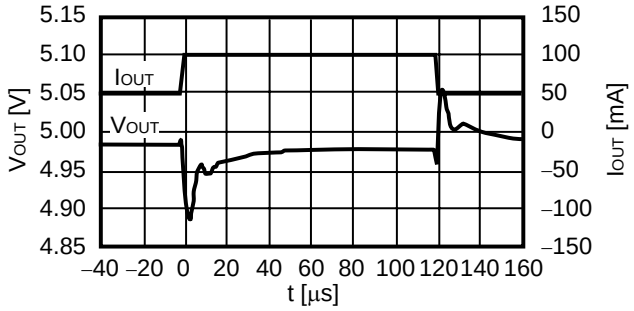

(3) ON / OFF Pin Transient Response Characteristics (Ta = 25°C)

S-1167B15

V_{IN} = 2.5 V, C_{OUT} =1.0 μF, C_{IN} = 1.0 μF, I_{OUT} = 100 mA

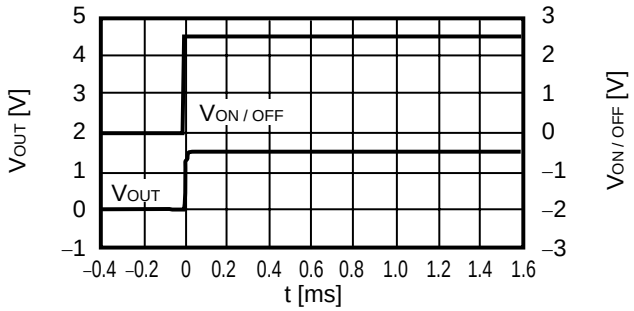

S-1167B30

V_{IN} = 4.0 V, C_{OUT} =1.0 μF, C_{IN} = 1.0 μF, I_{OUT} = 100 mA

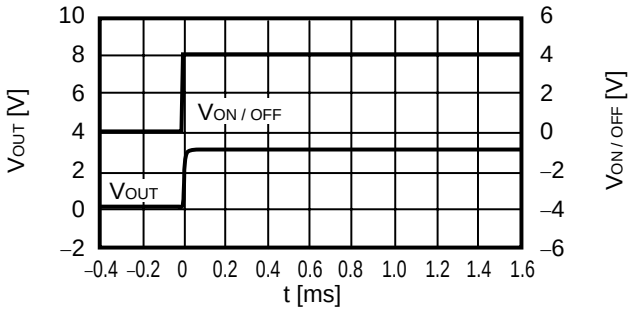

S-1167B50

V_{IN} = 6.0 V, C_{OUT} =1.0 μF, C_{IN} = 1.0 μF, I_{OUT} = 100 mA

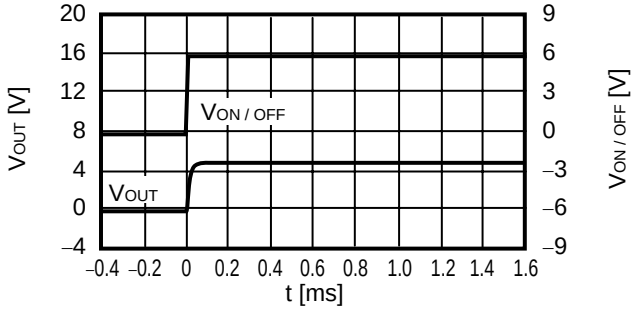

■ Marking Specifications

(1) SOT-23-5

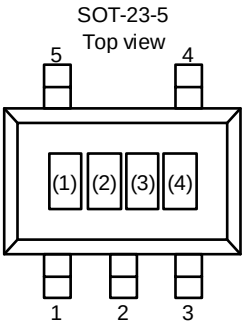

(1) to (3): Product code (refer to **Product name vs. Product code**)
(4) : Lot number

Product name vs. Product code

(a) S-1167 Series A type

Product name	Product code		
	(1)	(2)	(3)
S-1167A15-M5T1x	P	2	A
S-1167A1J-M5T1x	P	3	P
S-1167A19-M5T1x	P	2	E
S-1167A30-M5T1x	P	2	P
S-1167A33-M5T1x	P	2	S
S-1167A50-M5T1x	P	3	J

(b) S-1167 Series B type

Product name	Product code		
	(1)	(2)	(3)
S-1167B15-M5T1x	P	4	A
S-1167B16-M5T1x	P	4	B
S-1167B17-M5T1x	P	4	C
S-1167B18-M5T1x	P	4	D
S-1167B19-M5T1x	P	4	E
S-1167B20-M5T1x	P	4	F
S-1167B21-M5T1x	P	4	G
S-1167B22-M5T1x	P	4	H
S-1167B23-M5T1x	P	4	I
S-1167B24-M5T1x	P	4	J
S-1167B25-M5T1x	P	4	K
S-1167B26-M5T1x	P	4	L
S-1167B27-M5T1x	P	4	M
S-1167B28-M5T1x	P	4	N
S-1167B29-M5T1x	P	4	O
S-1167B30-M5T1x	P	4	P
S-1167B31-M5T1x	P	4	Q
S-1167B32-M5T1x	P	4	R
S-1167B33-M5T1x	P	4	S
S-1167B34-M5T1x	P	4	T
S-1167B35-M5T1x	P	4	U

Product name	Product code		
	(1)	(2)	(3)
S-1167B36-M5T1x	P	4	V
S-1167B37-M5T1x	P	4	W
S-1167B38-M5T1x	P	4	X
S-1167B39-M5T1x	P	4	Y
S-1167B40-M5T1x	P	4	Z
S-1167B41-M5T1x	P	5	A
S-1167B42-M5T1x	P	5	B
S-1167B43-M5T1x	P	5	C
S-1167B44-M5T1x	P	5	D
S-1167B45-M5T1x	P	5	E
S-1167B46-M5T1x	P	5	F
S-1167B47-M5T1x	P	5	G
S-1167B48-M5T1x	P	5	H
S-1167B49-M5T1x	P	5	I
S-1167B50-M5T1x	P	5	J
S-1167B51-M5T1x	P	5	K
S-1167B52-M5T1x	P	5	L
S-1167B53-M5T1x	P	5	M
S-1167B54-M5T1x	P	5	N
S-1167B55-M5T1x	P	5	O

Remark 1. Please contact our sales office for the products other than those above.
2. x: G or U
3. Please select products of environmental code = U for Sn 100%, halogen-free products.

(2) SNT-6A(H)

SNT-6A(H)
Top view

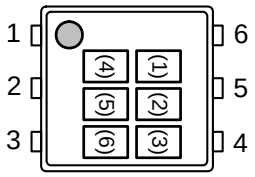

(1) to (3): Product code (refer to **Product name vs. Product code**)
(4) to (6): Lot number

Product name vs. Product code

Product name	Product code		
	(1)	(2)	(3)
S-1167B15-I6T2x	P	4	A
S-1167B16-I6T2x	P	4	B
S-1167B17-I6T2x	P	4	C
S-1167B18-I6T2x	P	4	D
S-1167B19-I6T2x	P	4	E
S-1167B20-I6T2x	P	4	F
S-1167B21-I6T2x	P	4	G
S-1167B22-I6T2x	P	4	H
S-1167B23-I6T2x	P	4	I
S-1167B24-I6T2x	P	4	J
S-1167B25-I6T2x	P	4	K
S-1167B26-I6T2x	P	4	L
S-1167B27-I6T2x	P	4	M
S-1167B28-I6T2x	P	4	N
S-1167B29-I6T2x	P	4	O
S-1167B30-I6T2x	P	4	P
S-1167B31-I6T2x	P	4	Q
S-1167B32-I6T2x	P	4	R
S-1167B33-I6T2x	P	4	S
S-1167B34-I6T2x	P	4	T
S-1167B35-I6T2x	P	4	U

Product name	Product code		
	(1)	(2)	(3)
S-1167B36-I6T2x	P	4	V
S-1167B37-I6T2x	P	4	W
S-1167B38-I6T2x	P	4	X
S-1167B39-I6T2x	P	4	Y
S-1167B40-I6T2x	P	4	Z
S-1167B41-I6T2x	P	5	A
S-1167B42-I6T2x	P	5	B
S-1167B43-I6T2x	P	5	C
S-1167B44-I6T2x	P	5	D
S-1167B45-I6T2x	P	5	E
S-1167B46-I6T2x	P	5	F
S-1167B47-I6T2x	P	5	G
S-1167B48-I6T2x	P	5	H
S-1167B49-I6T2x	P	5	I
S-1167B50-I6T2x	P	5	J
S-1167B51-I6T2x	P	5	K
S-1167B52-I6T2x	P	5	L
S-1167B53-I6T2x	P	5	M
S-1167B54-I6T2x	P	5	N
S-1167B55-I6T2x	P	5	O

Remark 1. Please contact our sales office for products with type A products.
2. x: G or U
3. Please select products of environmental code = U for Sn 100%, halogen-free products.

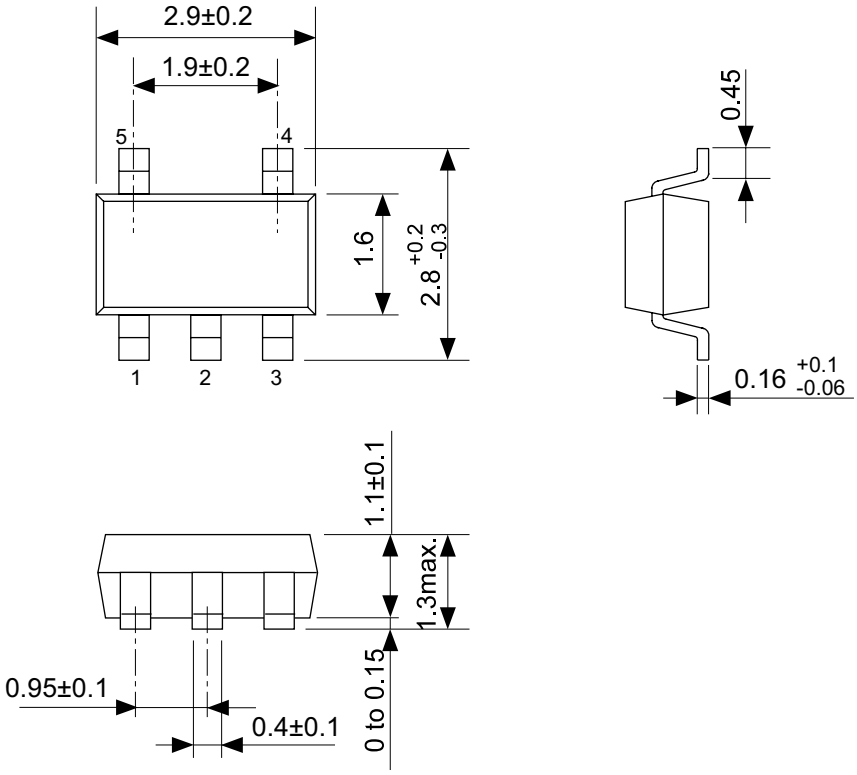

No. MP005-A-P-SD-1.2

TITLE	SOT235-A-PKG Dimensions
No.	MP005-A-P-SD-1.2
SCALE	
UNIT	mm
Seiko Instruments Inc.	

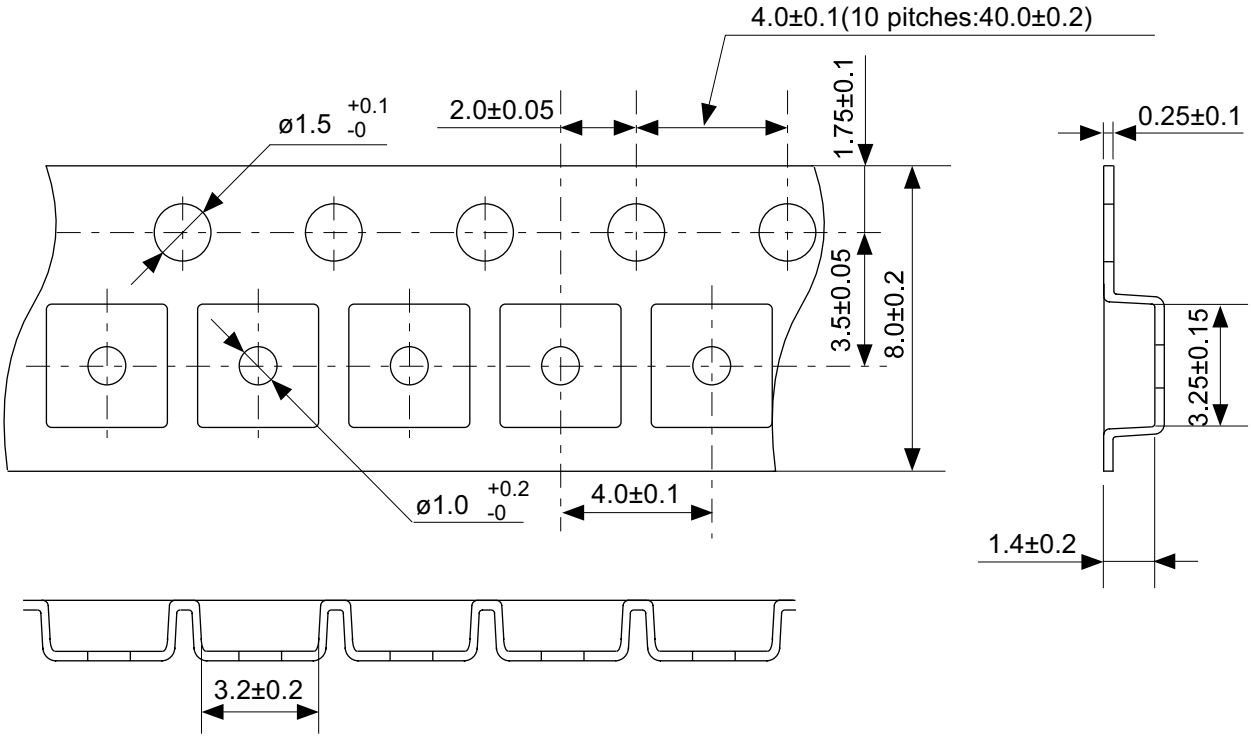

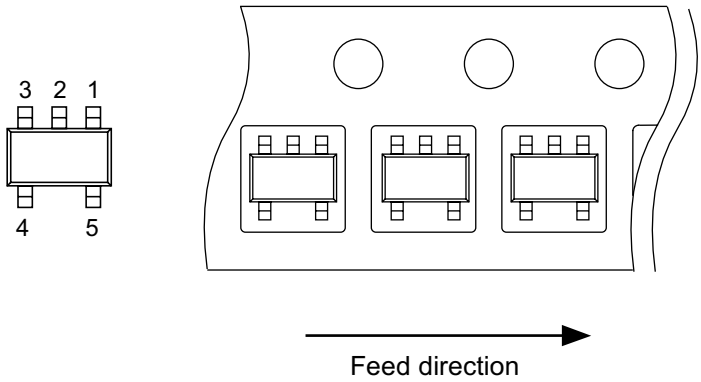

No. MP005-A-C-SD-2.1

TITLE	SOT235-A-Carrier Tape
No.	MP005-A-C-SD-2.1
SCALE	
UNIT	mm
Seiko Instruments Inc.	

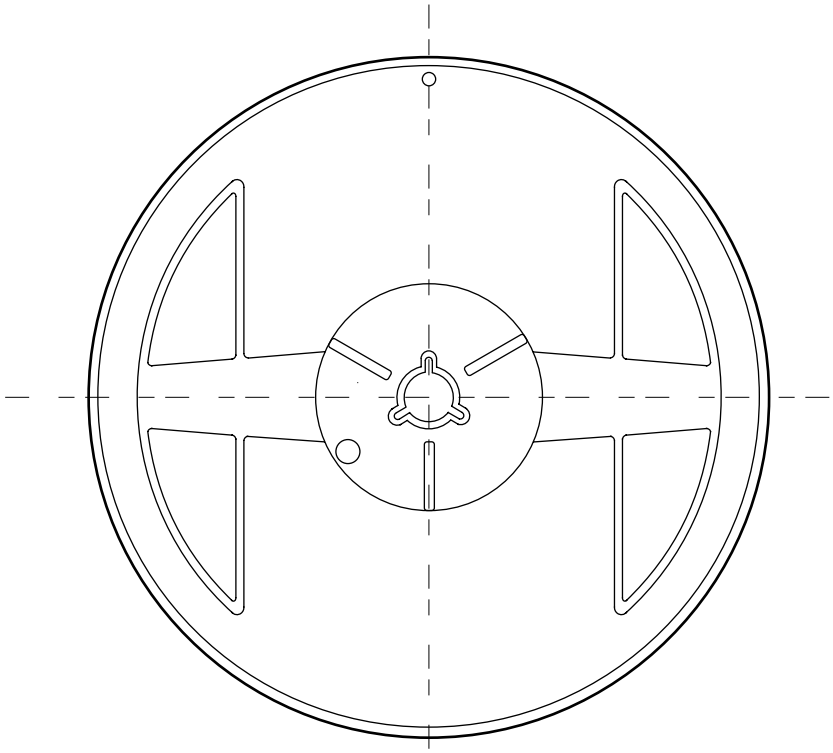

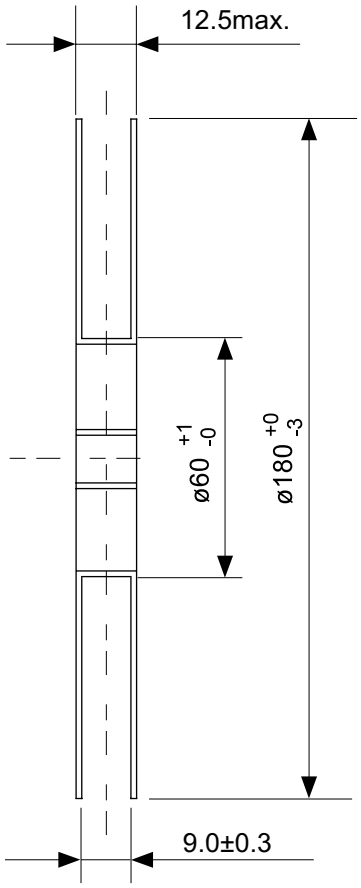

Enlarged drawing in the central part

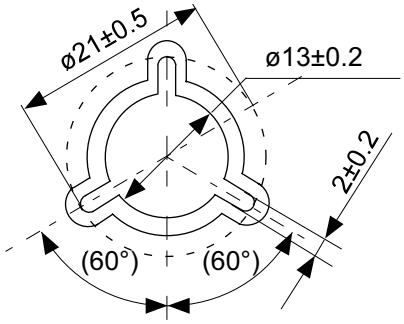

No. MP005-A-R-SD-1.1

TITLE	SOT235-A-Reel		
No.	MP005-A-R-SD-1.1		
SCALE		QTY.	3,000
UNIT	mm		
Seiko Instruments Inc.			

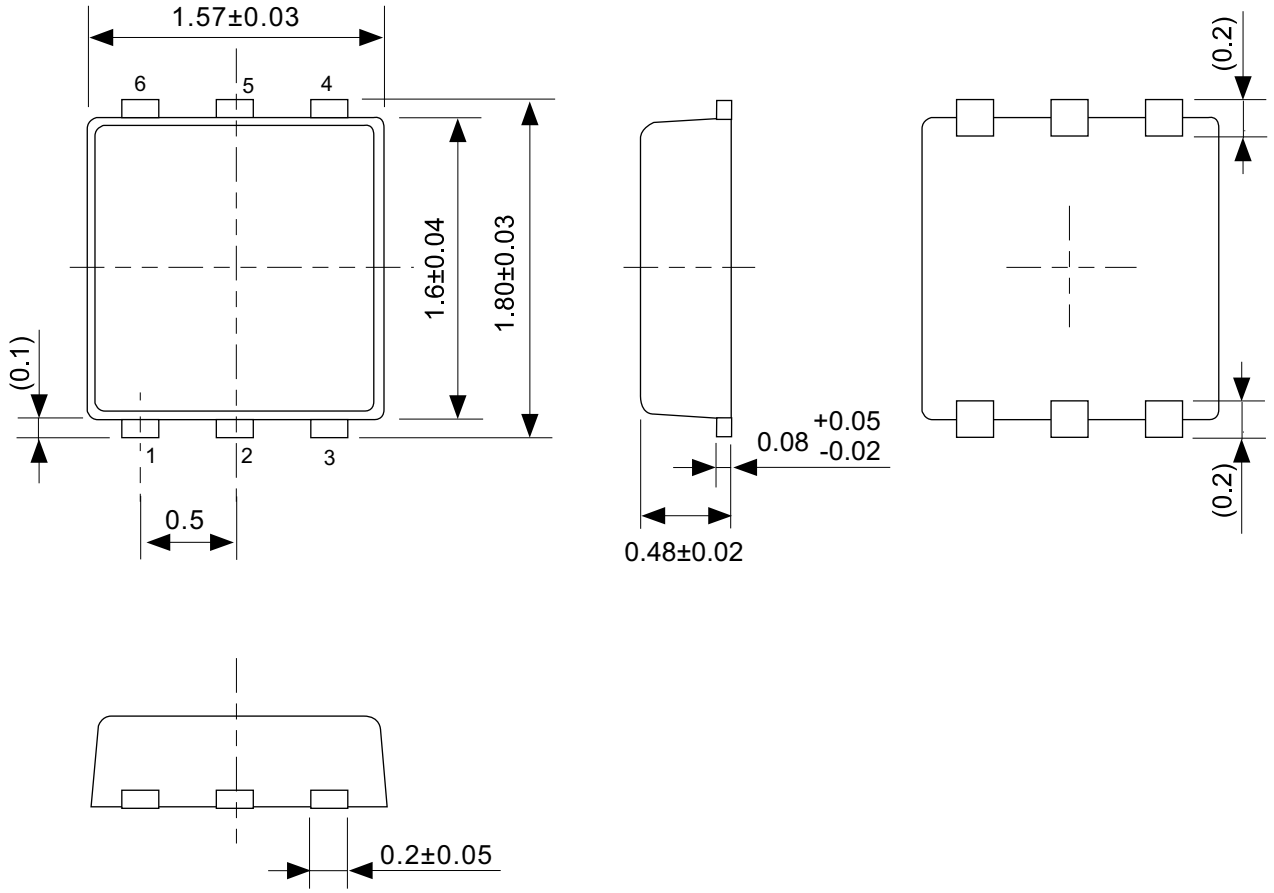

No. PI006-A-P-SD-2.0

TITLE	SNT-6A(H)-A-PKG Dimensions
No.	PI006-A-P-SD-2.0
SCALE	
UNIT	mm
Seiko Instruments Inc.	

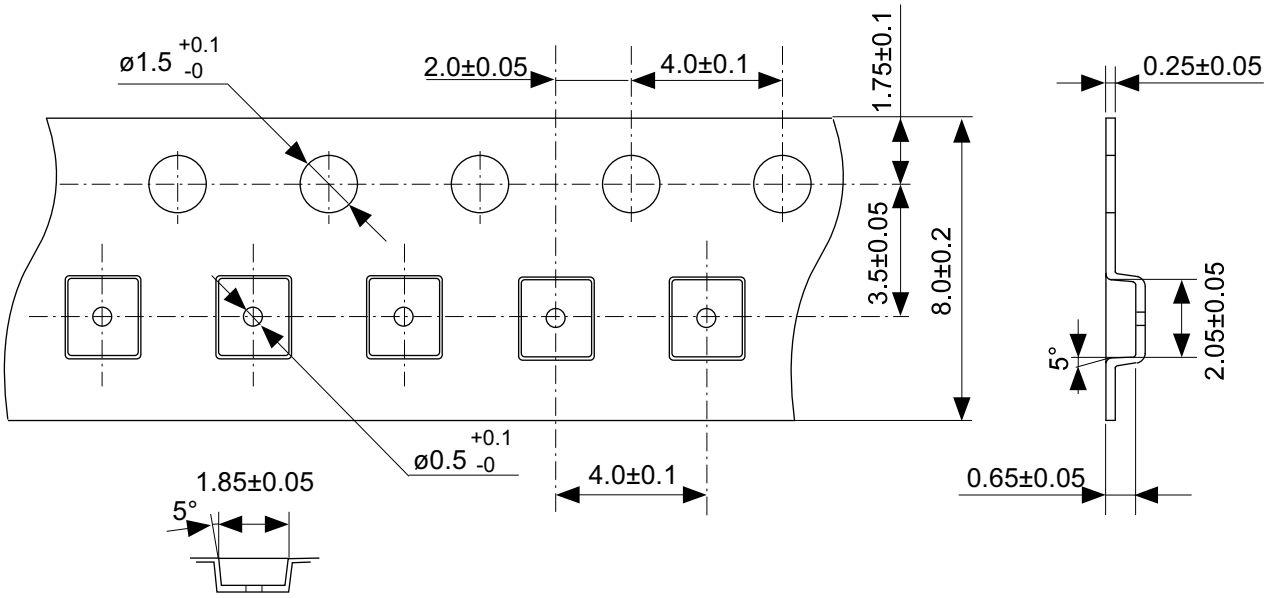

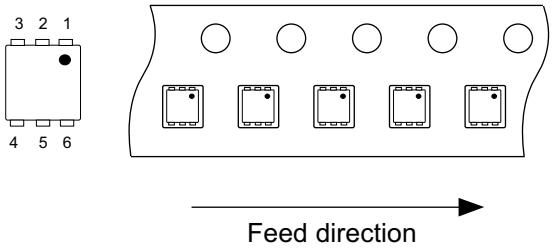

No. PI006-A-C-SD-1.0

TITLE	SNT-6A(H)-A-Carrier Tape
No.	PI006-A-C-SD-1.0
SCALE	
UNIT	mm
Seiko Instruments Inc.	

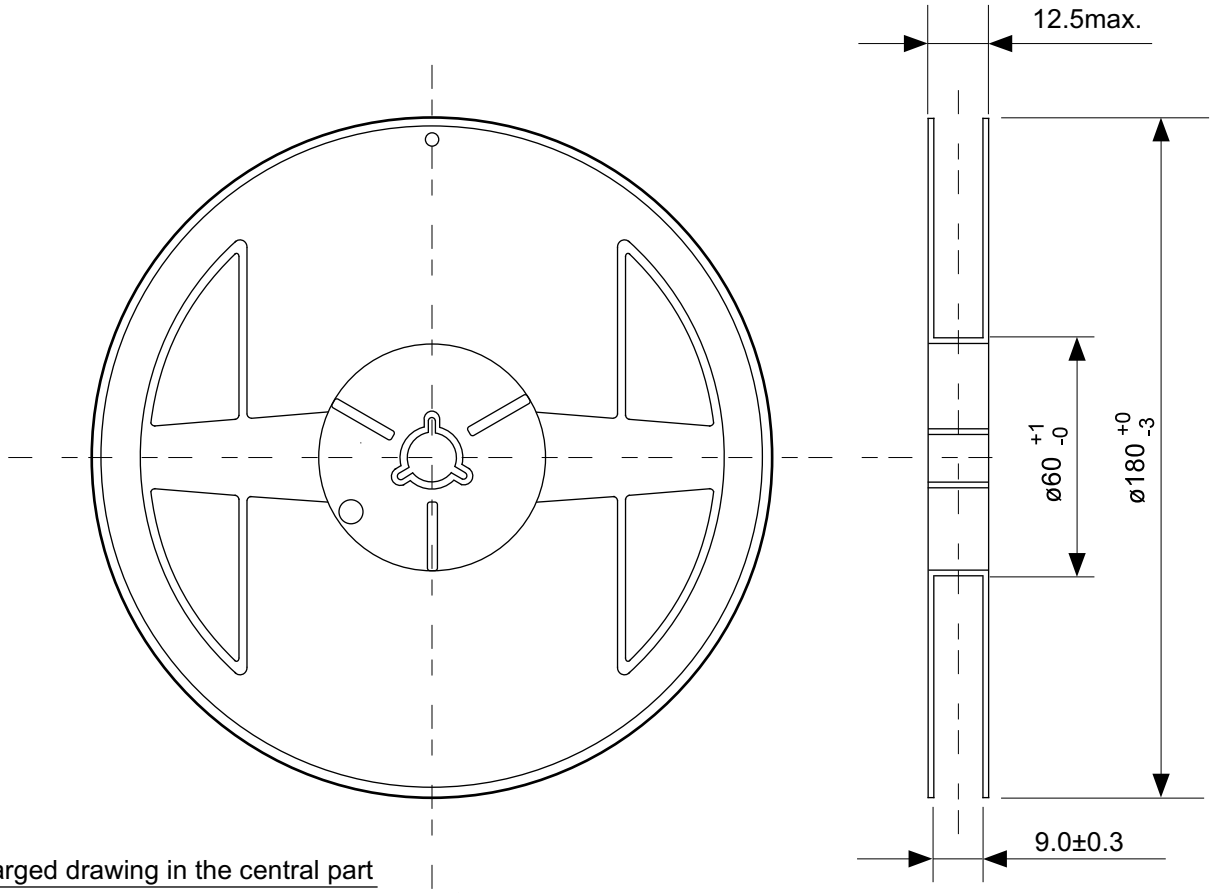

Enlarged drawing in the central part

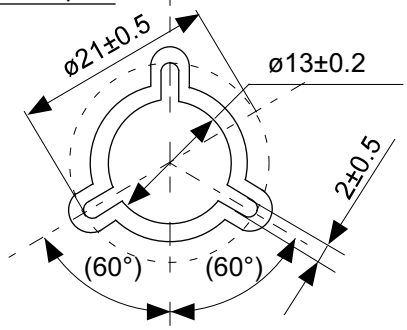

No. PI006-A-R-SD-1.0

TITLE	SNT-6A(H)-A-Reel		
No.	PI006-A-R-SD-1.0		
SCALE		QTY.	5,000
UNIT	mm		
Seiko Instruments Inc.			

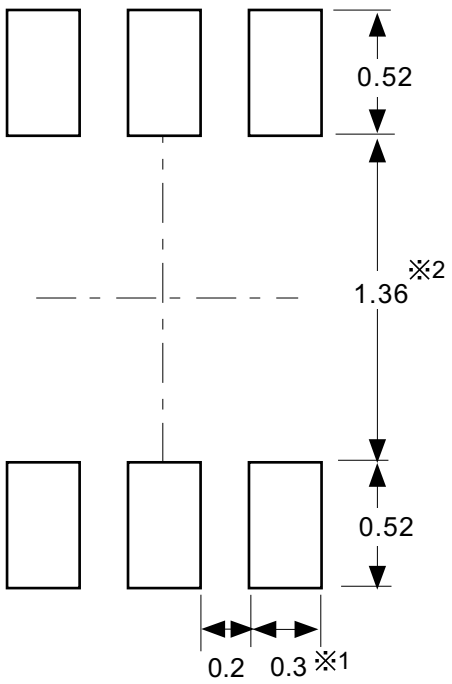

※1. ランドパターンの幅に注意してください (0.25 mm min. / 0.30 mm typ.)。
※2. パッケージ中央にランドパターンを広げないでください (1.30 mm ~ 1.40 mm)。

注意 1. パッケージのモールド樹脂下にシルク印刷やハンダ印刷などしないでください。
2. パッケージ下の配線上のソルダーレジストなどの厚みをランドパターン表面から0.03 mm 以下にしてください。
3. マスク開口サイズと開口位置はランドパターンと合わせてください。
4. 詳細は〝SNTパッケージ活用の手引き〟を参照してください。

※1. Pay attention to the land pattern width (0.25 mm min. / 0.30 mm typ.).
※2. Do not widen the land pattern to the center of the package (1.30 mm to 1.40 mm).

Caution 1. Do not do silkscreen printing and solder printing under the mold resin of the package.
2. The thickness of the solder resist on the wire pattern under the package should be 0.03 mm or less from the land pattern surface.
3. Match the mask aperture size and aperture position with the land pattern.
4. Refer to "SNT Package User's Guide" for details.

※**1.** 请注意焊盘模式的宽度 (0.25 mm min. / 0.30 mm typ.)。
※**2.** 请勿向封装中间扩展焊盘模式 (1.30 mm ~ 1.40 mm)。

注意 **1.** 请勿在树脂型封装的下面印刷丝网、焊锡。
2. 在封装下、布线上的阻焊膜厚度 **(**从焊盘模式表面起**)** 请控制在**0.03 mm**以下。
3. 掩膜的开口尺寸和开口位置请与焊盘模式对齐。
4. 详细内容请参阅 **"SNT**封装的应用指南**"**。

No. PI006-A-L-SD-4.0

TITLE	SNT-6A(H)-A-Land Recommendation
No.	PI006-A-L-SD-4.0
SCALE	
UNIT	mm

Seiko Instruments Inc.

Seiko Instruments Inc.
www.sii-ic.com

- The information described herein is subject to change without notice.
- Seiko Instruments Inc. is not responsible for any problems caused by circuits or diagrams described herein whose related industrial properties, patents, or other rights belong to third parties. The application circuit examples explain typical applications of the products, and do not guarantee the success of any specific mass-production design.
- When the products described herein are regulated products subject to the Wassenaar Arrangement or other agreements, they may not be exported without authorization from the appropriate governmental authority.
- Use of the information described herein for other purposes and/or reproduction or copying without the express permission of Seiko Instruments Inc. is strictly prohibited.
- The products described herein cannot be used as part of any device or equipment affecting the human body, such as exercise equipment, medical equipment, security systems, gas equipment, vehicle equipment, in-vehicle equipment, aviation equipment, aerospace equipment, and nuclear-related equipment, without prior written permission of Seiko Instruments Inc.
- The products described herein are not designed to be radiation-proof.
- Although Seiko Instruments Inc. exerts the greatest possible effort to ensure high quality and reliability, the failure or malfunction of semiconductor products may occur. The user of these products should therefore give thorough consideration to safety design, including redundancy, fire-prevention measures, and malfunction prevention, to prevent any accidents, fires, or community damage that may ensue.