THIS DRAWING IS UNPUBLISHED. RELEASED FOR PUBLICATION -,- .
© COPYRIGHT - By - ALL RIGHTS RESERVED.

LOC	DIST
AF	50

REVISIONS

P	LTR	DESCRIPTION	DATE	DWN	APVD
	AN1	REVISED PER ECR-14-004075	24MAR2014	NK	RL

1 CONTINUOUS STRIP ON REELS.

2 FINISH LEAD-FREE, MATTE TIN OVER NICKEL

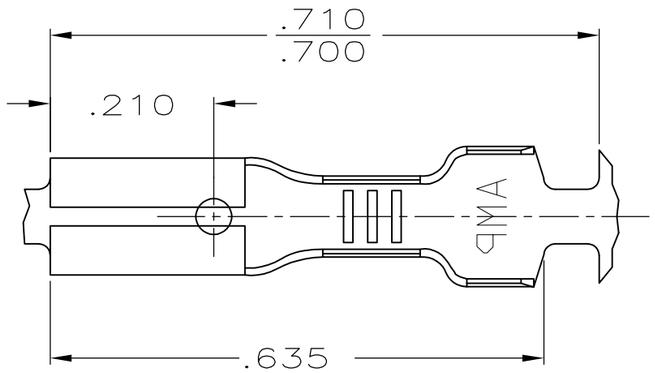

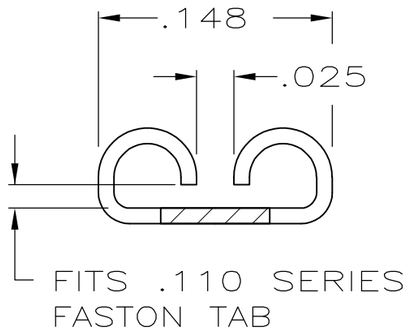

VIEW A-A

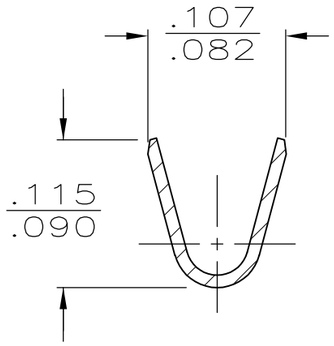

SECTION B-B

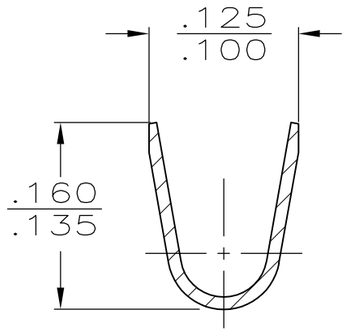

SECTION C-C

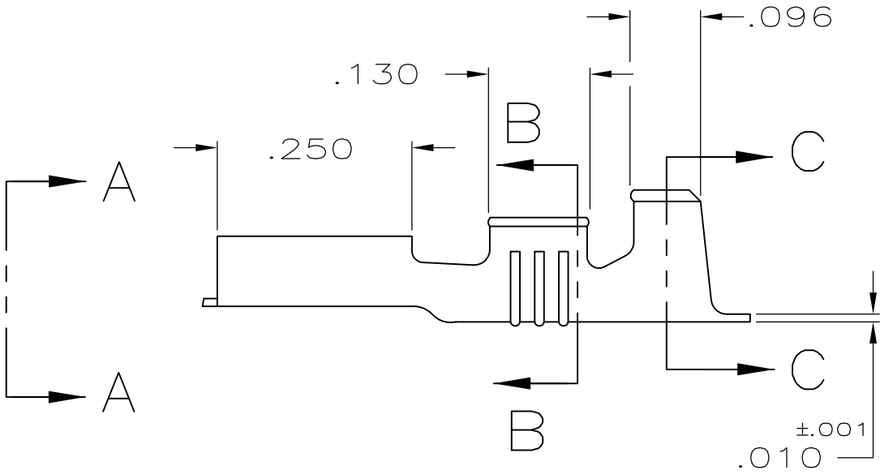

OBSOLETE	SILVER	#4H BRASS	.060-.100	22-18	.020	~~42068-6~~
OBSOLETE	GOLD	#4H BRASS	.060-.100	22-18	.020	~~42068-5~~
OBSOLETE	TIN	#4H PHOS BRZ	.060-.100	22-18	.020	~~42068-4~~
OBSOLETE	-	#4H PHOS BRZ	.060-.100	22-18	.020	~~42068-3~~
	2	BRASS	.060-.100	22-18	.020	42068-2
	PRE-TIN	BRASS	.060-.100	22-18	.020	42068-1
	-	BRASS	.060-.100	22-18	.020	42068-0
	FINISH	MATERIAL	INSUL RANGE	WIRE SIZE	TAB THK ±.001	PART NO

THIS DRAWING IS A CONTROLLED DOCUMENT.

DIMENSIONS: INCHES

TOLERANCES UNLESS OTHERWISE SPECIFIED:

0 PLC	± -
1 PLC	± -
2 PLC	± -
3 PLC	± .015
4 PLC	± -
ANGLES	± -

MATERIAL: SEE TABLE

FINISH: SEE TABLE

DWN — 6/23/87
CHK —
APVD —
PRODUCT SPEC —
APPLICATION SPEC —
WEIGHT —

TE Connectivity

NAME: RECEPTACLE, FASTON,™ .110 SERIES

SIZE	CAGE CODE	DRAWING NO	RESTRICTED TO
A3	00779	C-42068	—

CUSTOMER DRAWING

SCALE	SHEET	REV
NTS	1 OF 1	AN1