DRAWING FOR REFERENCE:This is subject to change without notice

2007/06/06 14:21:44 TS.SAKAIZAWA

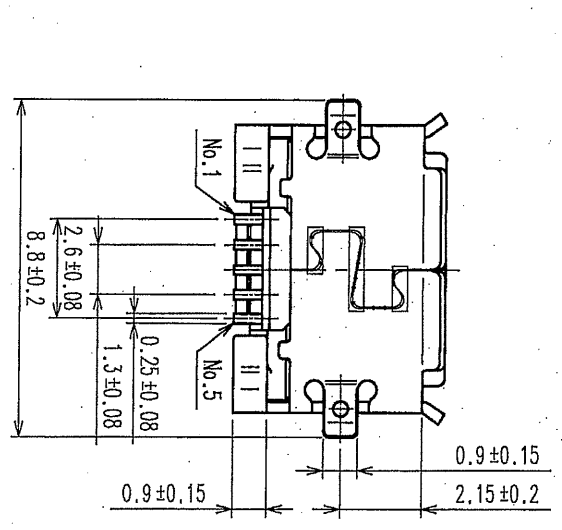

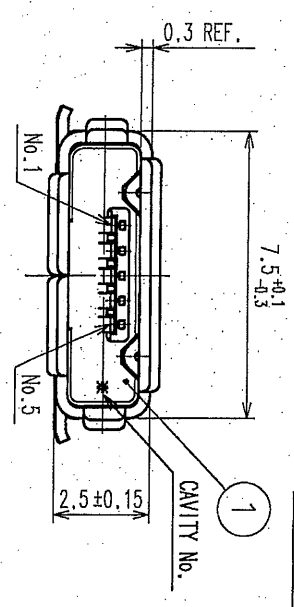

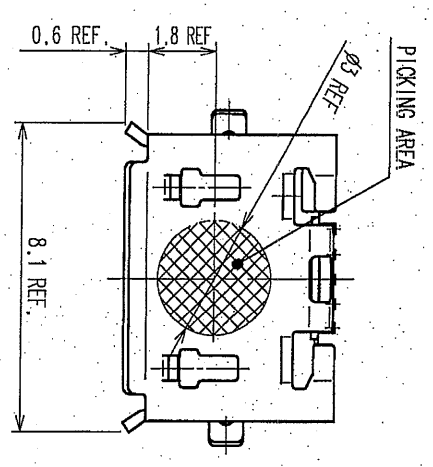

RECOMMENDED PANEL CUTOUT (4:1)

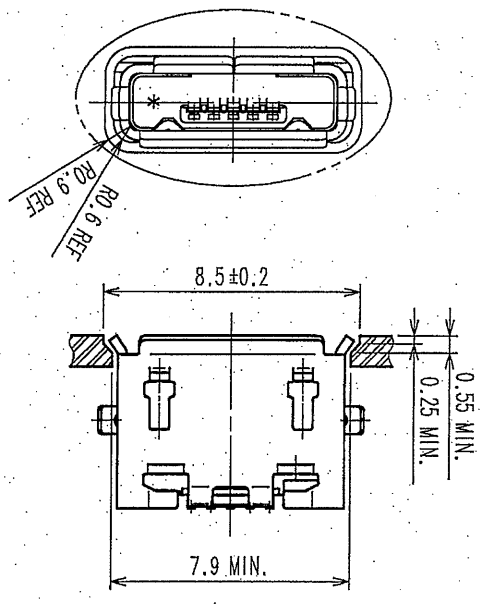

MATED WITH CORRESPONDING PLUG (4:1)

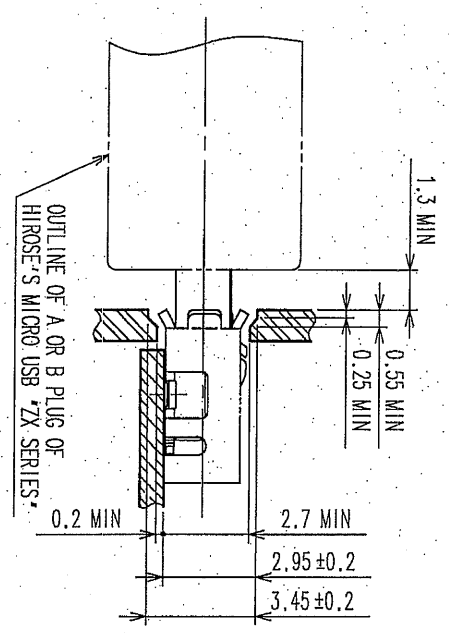

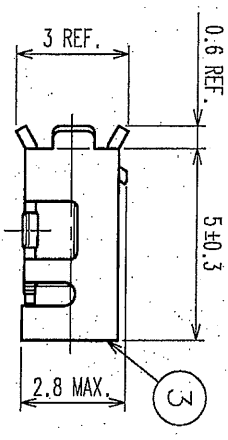

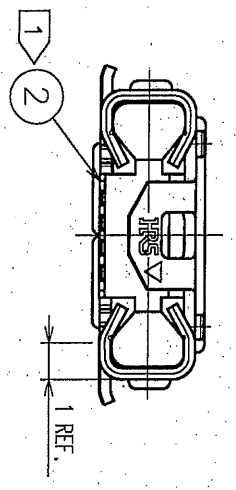

NOTES

1. CO-PLANARITY IS WITHIN 0.08 mm.
2. PLATING
   CONTACT AREA : GOLD 0.75μm min.
   LEAD AREA : GOLD 0.05μm min.
   UNDER PLATING: NICKEL 2μm min.
3. PER REEL : 2000 pcs.
4. INTERFACE DIMENSIONS CONFORM TO USB2.0 SPECIFICATION.

PCB LAYOUT

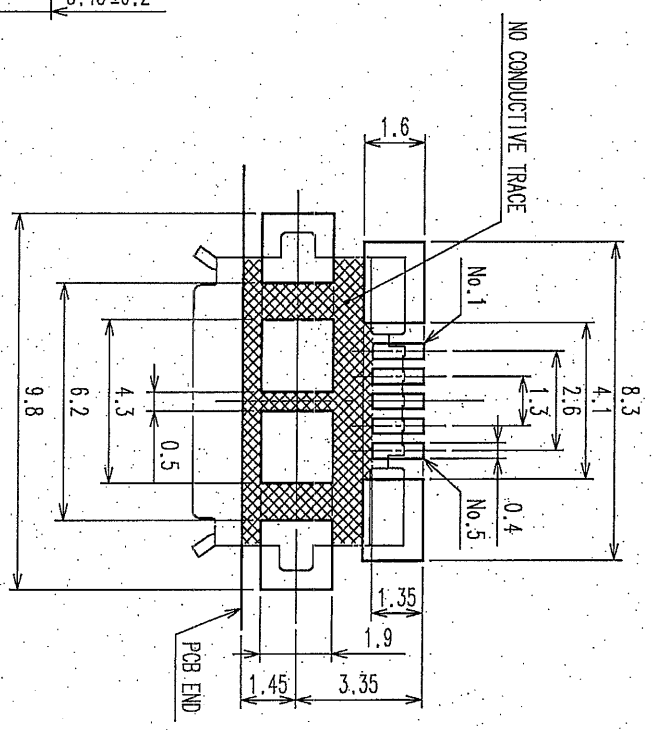

GENERAL TOLERANCE IS ±0.05 mm.

3 DRAWING FOR PACKING (2:1)

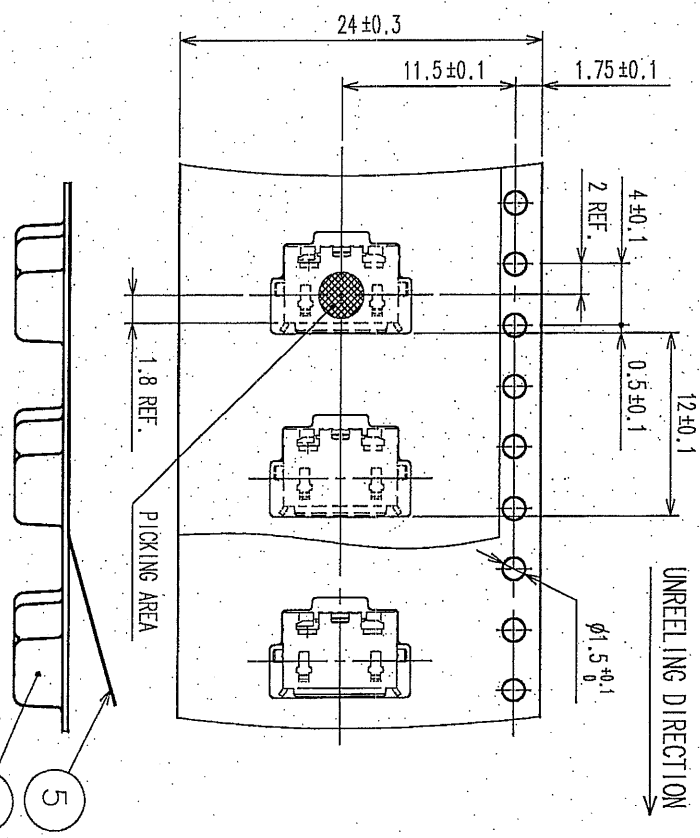

REEL (FREE)

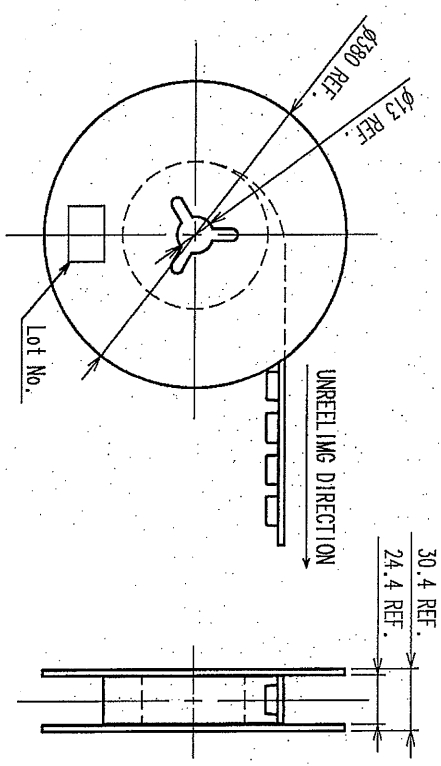

NO.	MATERIAL	FINISH, REMARKS
1	LCP	GRAY, UL94V-0
2	COPPER ALLLOY	
3	STAINLESS STEEL	TIN PLATING 1μm min. LUBRICANT
4	PS	
5	PE	

CODE NO.(OLD)

COUNT	DESCRIPTION OF REVISIONS	BY	CHKD	DATE

	DRAWN	DESIGNED	CHECKED	APPROVED
	J.Miura 07.04.20	J.Miura 07.04.20	H.Kobayashi 07.04.20	07.04.20

RELEASED ENG 07.6.6 DEPT

DRAWING NO. EDC3-126275

SCALE 5 : 1

UNITS mm

HIROSE ELECTRIC CO., LTD

PART NO. ZX62-AB-5P

CODE NO. CL242-0029-0

1/1

FORM NO.229