PRODUCT NUMBER
95253–YXXXLF

WHEN REQUIRED, ADD SUFFIX LETTER "LF" INDICATES THE PRODUCT IS RoHS COMPATIBLE, NOTE 6.
PACKAGING OPTIONS, NOTE 3.

PLATING

1 = 0.76µm GOLD/GXT (FULL PLATED) ON 1.27µm NICKEL MIN

3 = 2µm MIN MATTE TIN (FULL PLATED) ON 1.27µm NICKEL MIN

8 = 0.38µm GOLD/GXT (FULL PLATED) ON 1.27µm NICKEL MIN

STYLE	SIZE	DIM"A"	OMIT PIN
01	2x07	5.9	A3
02	2x07	8.0	A3
03	2x04	5.9	B4
04	2x07	5.9	B4
05	2x08	5.9	B7

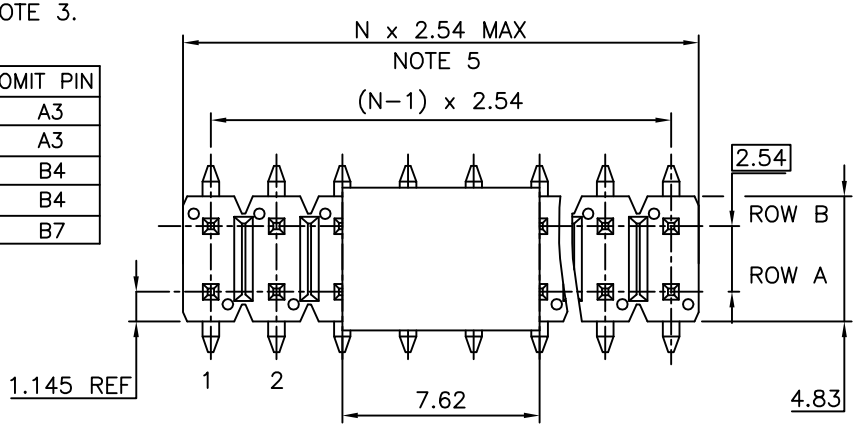

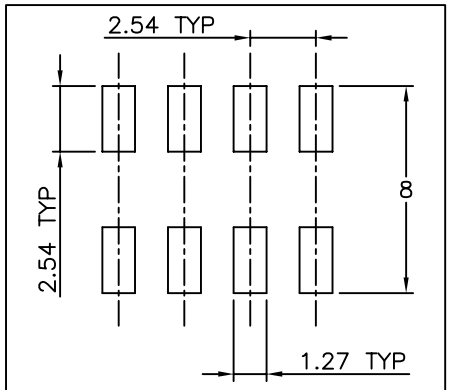

RECOMMENDED PAD LAYOUT

NOTES:

1. HOUSING MAT'L : HIGH TEMPERATURE THERMOPLASTIC. UL94V–0 COLOR: BLACK
2. PIN MATERIAL : PHOSPHOR BRONZE
3 – PACKAGING OPTIONS:
   = POLY BAGS
   B = TUBE + CAP
   A = TAPE & REEL WITH CAP, AS AVAILABLE
4. 9N MIN RETENTION IN EITHER DIRECTION
5. TO DETERMINE DIMENSIONS :
   N = NUMBER OF POSITIONS PER ROW
   EXAMPLE : 8 POS N x 2.54 = 20.32mm
6. RoHS COMPATIBLE PRODUCT SPECIFICATIONS
   a – PLATING:
   – "LF" MEANS THE PRODUCT IS LEAD–FREE, 2µm MINIMUM MATTE TIN OVER 1.27µm MINIMUM NICKEL UNDERPLATE.
   b – MANUFACTURING PROCESS COMPATIBILITY
   – THE HOUSING WILL WITHSTAND EXPOSURE TO 260°C PEAK TEMPERATURE FOR 30 SECONDES IN A CONVECTION, INFRA–RED OR VAPOR PHASE REFLOW OVEN.
   c – LABELING:
   – MEETS PACKAGING SPECS AS PER GS–14–920
   d – LEGAL STATEMENT: SEE GS–47–0004

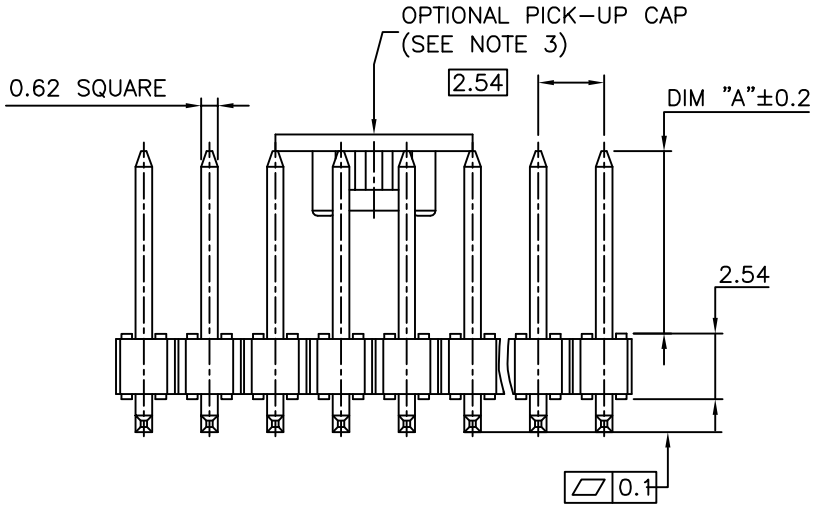

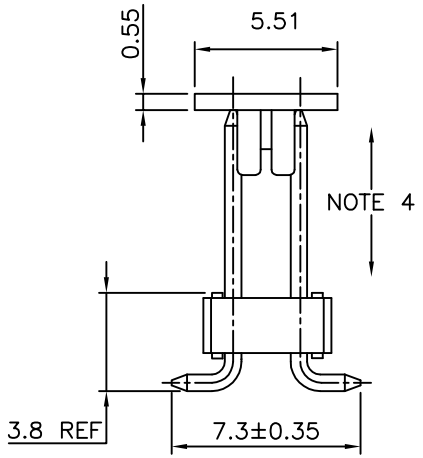

mat'l. code				surface ISO 1302	tolerance ISO 406 ISO 1101	projection	product family HEADER
ltr	ecn no	dr	date	tolerances unless otherwise specified			title
H	F90366	LMU	99.06.08	angles	linear x.x ±0.3	mm	HEADER DR, SMT,POLARIZED
J	F03–0201	LMU	03.04.23		x.xx ±0.13		
K	F04–0362	LMU	04.11.30		x.xxx ±0.05	scale 5:1	
L	F06–0168	LMU	06.04.21	dr P.NIZZI	96.04.15		dwg no 95253 sheet 1 of 1 size A3
M	F06–0208	JCO	06.06.22	engr J COMPAGNON	96.04.15		
N	F08–0148	JCO	08.05.27	chr			
P	F–23191	AMA	16.02.01	appd JMC	96.04.15		type CUSTOMER Drawing
sheet index	revision sheet						

Copyright FCI
FCIconnect.com

form: A3