THIS DRAWING IS UNPUBLISHED. RELEASED FOR PUBLICATION NOV ,2006.
© COPYRIGHT 2006 By – ALL RIGHTS RESERVED.

LOC	DIST
E	B

REVISIONS

P	LTR	DESCRIPTION	DATE	DWN	APVD
	B1	REVISED PER ECO-11-005033	01APR11	RK	HMR
	C	REVISED PER ECO-12-009395	17MAY12	TITAN	MARTIN

NOTES:

1. PACK IN ACCORDANCE WITH AMP SPEC 107-3275
2. 100 TRAY PACK IN ACCORDANCE WITH AMP SPEC 107-3275
3. Au PLATING
4. Ni PLATING
5. FOR TECHNICAL DATA REFER TO YOUR LOCAL TE CONNECTIVITY SALES OFFICE
6. ALL DIMENSIONS ARE NOMINAL FOR REFERENCE ONLY UNLESS OTHERWISE STATED

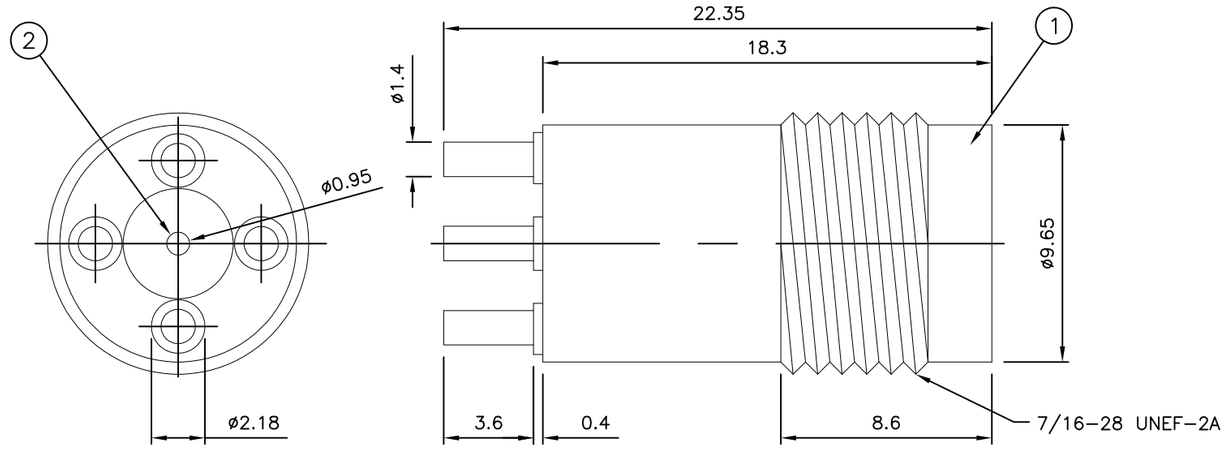

50 OHMS VERSION

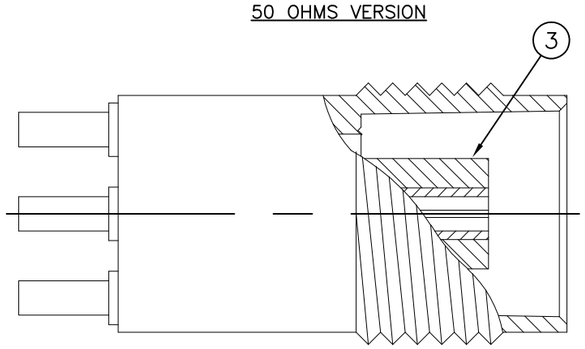

75 OHMS VERSION

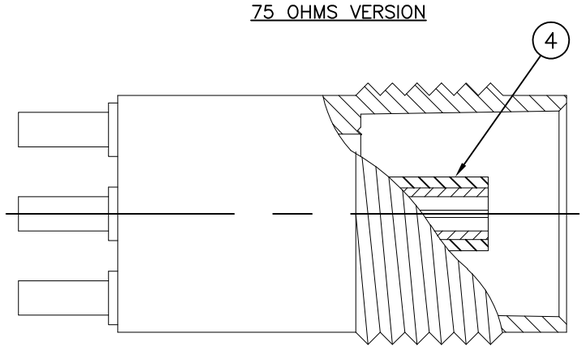

RECOMMENDED PCB LAYOUT

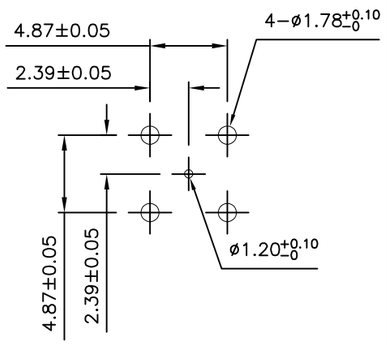

Obsolete	Obsolete		Obsolete			
1	1	–	–	PTFE	INSULATION	4
–	–	1	1	PTFE	INSULATION	3
1	1	1	1	PHOSPHOR BRONZE 3	CONTACT	2
1	1	1	1	ZINC 4	BODY	1
5--3	5--2	5--1	5--0	MATERIAL	DESCRIPTION	ITEM
1	2	1	2			
QUANTITY PER ASSY				PARTS LIST		

THIS DRAWING IS A CONTROLLED DOCUMENT.

DIMENSIONS: mm

TOLERANCES UNLESS OTHERWISE SPECIFIED:

0 PLC	± –
1 PLC	± –
2 PLC	± –
3 PLC	± –
4 PLC	± –
ANGLES	± –

MATERIAL: SEE TABLE

FINISH: SEE TABLE

DWN RITA ZUO 11 Mar 09
CHK ANSON MA 11 Mar 09
APVD BOB ZHAO 11 Mar 09
PRODUCT SPEC 108-112000
APPLICATION SPEC —
WEIGHT —

TE Connectivity

NAME: TNC STRAIGHT PCB SOCKET 50 & 75 OHM

SIZE A3 | CAGE CODE 00779 | DRAWING NO C-1814805 | RESTRICTED TO —

CUSTOMER DRAWING | SCALE NTS | SHEET 1 OF 1 | REV C