| MATERIAL NUMBER | OLD PART NUMBER | FINISHED LENGTH |
|---|---|---|
| 1201140052 | BTY496P-FBP-05 | 16.40′ +6.50″ -0 [5.0M +165.1 -0] |
| | | |

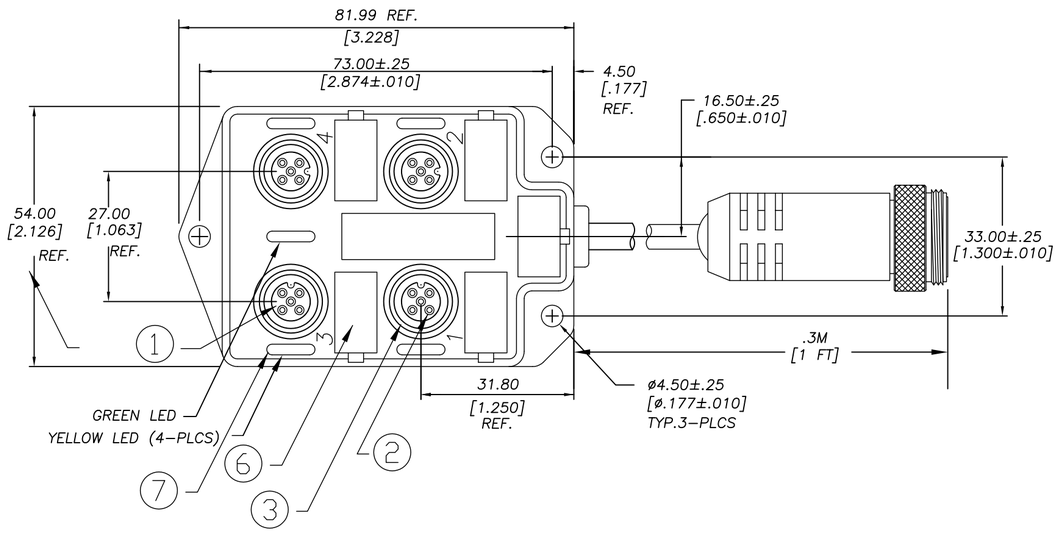


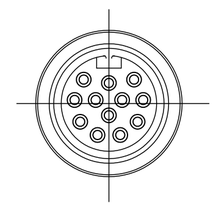

FRONT VIEW – MALE INSERT

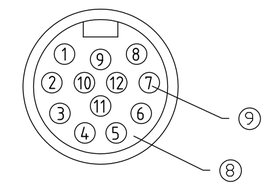


| | | |
|---|---|---|
| 22 AWG | 1 | GREEN |
| 22 AWG | 2 | WHITE |
| 22 AWG | 3 | GREY |
| | 4 | NOT USED |
| | 5 | NOT USED |
| | 6 | NOT USED |
| | 7 | NOT USED |
| | 8 | NOT USED |
| 18 AWG | 9 | BLUE |
| 18 AWG | 10 | GREEN/YELLOW |
| 22 AWG | 11 | YELLOW |
| 18 AWG | 12 | BROWN |

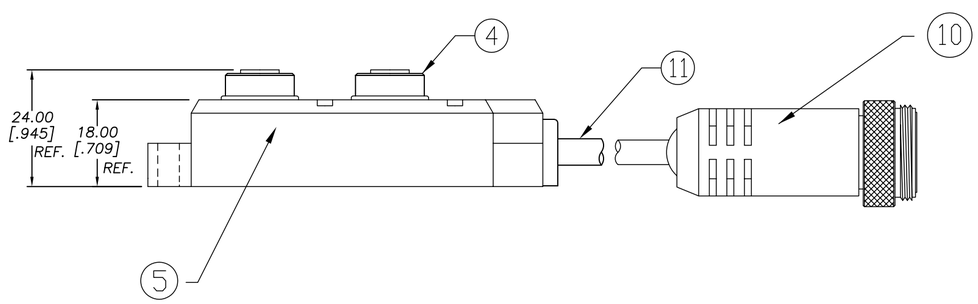


NUMBERS IN BRACKETS
ARE FOR NUMBERED CORED CABLE

| ITEM | COMPONENT | MATERIAL | FINISH |
|---|---|---|---|
| 1 | INSERT | NYLON | BLACK |
| 2 | CONTACT SOCKET | COPPER ALLOY | GOLD OVER NICKEL |
| 3 | O-RING | VITON | RED |
| 4 | RECEPTACLE SHELL | BRASS | NICKEL PLATED |
| 5 | HOUSING | PBT | YELLOW |
| 6 | LABEL | ABS | WHITE |
| 7 | LENS | NYLON | CLEAR |
| 8 | INSERT | PVC | YELLOW |
| 9 | CONTACT PIN | COPPER ALLOY | GOLD OVER NICKEL |
| 10 | RECEPTACLE SHELL | BRASS | NICKEL PLATED |
| 11 | CABLE, 18AWG, 3 CONDUCTOR, 22AWG, 8 CONDUCTOR, 300V | PUR | BLACK |

| | |
|---|---|
| VOLTAGE RATING | 10-30 VDC |
| AMPERAGE RATING PER PORT | 4 AMPS |
| PROTECTION | IP67 |
| OPERATING TEMPERATURE | -20°C TO 90°C |
| UL CERTIFICATIONS | UL RECOGNIZED, FILE NO. E46237 |
| CSA CERTIFICATIONS | CSA CERTIFIED, FILE NO. LR6837 |

ADD 2 P/N'S TO TABLE
EC NO: WEU2010-0441
DRWN: BBRAUCH 2010/03/17
CH'KD: FP ---
APPR: FPACHER 2010/03/19
DESCRIPTION
1
REV

QUALITY SYMBOL
▼=0
(C)=0

GENERAL TOLERANCES (UNLESS SPECIFIED)

| | mm | INCH |
|---|---|---|
| 4 PLACES | ±--- | ±--- |
| 3 PLACES | ±--- | ±--- |
| 2 PLACES | ±--- | ±.01 |
| 1 PLACE | ±0.3 | ±--- |
| ANGULAR ±---° | | |

DRAFT WHERE APPLICABLE MUST REMAIN WITHIN DIMENSIONS

DIMENSION STYLE: IN/MM
SCALE: 2:1
DESIGN UNITS: METRIC
THIRD ANGLE PROJECTION

DRAWN BY: BBRAUCH DATE: 2010/03/17
CHECKED BY: FP DATE: 2010/03/17
APPROVED BY: FPACHER DATE: 2010/03/18
MATERIAL NO.: SEE CHART

TITLE: MICRO-CHANGE MPIS
4 PORT TOP MOUNT PNP
#18/3 + #22/8 CABLE

molex MOLEX INCORPORATED

DOCUMENT NO.: SD-120114-065
SHEET NO.: 1 OF 1

SIZE: C

THIS DRAWING CONTAINS INFORMATION THAT IS PROPRIETARY TO MOLEX INCORPORATED AND SHOULD NOT BE USED WITHOUT WRITTEN PERMISSION