PLEASE CHECK WWW.MOLEX.COM FOR LATEST PART INFORMATION

Part Number: 5021251240

Status: Obsolete

Description: 1.75mm (.069") Pitch Compak-Lock™ Wire-to-Board Header, Dual Row, Vertical, 12 Circuits

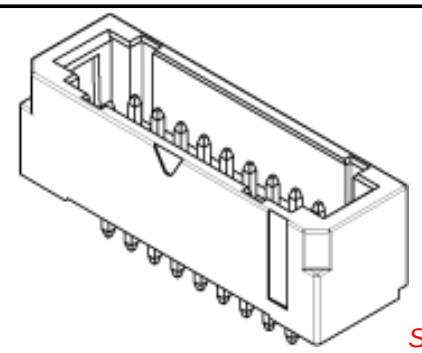

Series

image - Reference only

Documents:
Drawing (PDF)

General

Product Family	PCB Headers
Series	502125
Application	Signal, Wire-to-Board
Product Name	Compak-Lock™

Physical

Breakaway	No
Circuits (Loaded)	12
Color - Resin	Natural
Durability (mating cycles max)	30
Glow-Wire Compliant	No
Guide to Mating Part	Yes
Keying to Mating Part	Yes
Lock to Mating Part	Yes
Mated Height	9.50mm (.374")
Material - Metal	Brass
Material - Plating Mating	Tin
Material - Plating Termination	Tin
Material - Resin	Nylon
Number of Rows	2
Orientation	Vertical
PC Tail Length	3.20mm (.126")
PCB Locator	No
PCB Retention	None
PCB Thickness - Recommended	1.60mm (.063")
Packaging Type	Tray
Pitch - Mating Interface	1.50mm (.059")
Polarized to Mating Part	Yes
Polarized to PCB	No
Stackable	No
Surface Mount Compatible (SMC)	No
Temperature Range - Operating	-25°C to +85°C
Termination Interface: Style	Through Hole

Electrical

Current - Maximum per Contact	2A
Voltage - Maximum	250V AC (RMS)/DC

Material Info

Reference - Drawing Numbers

Application Specification	AS-502056-001, AS-502056-002
Product Specification	PS-502056-001, RPS-502056-001
Sales Drawing	SD-502125-001

EU RoHS
ELV and RoHS Compliant
REACH SVHC
Contains SVHC: No
Low-Halogen Status
Not Low-Halogen

China RoHS

Need more information on product environmental compliance?

Email productcompliance@molex.com
For a multiple part number RoHS Certificate of Compliance, click here

Please visit the Contact Us section for any non-product compliance questions.

Search Parts in this Series
502125Series

Mates With
502056 Crimp Housing. 502057 Crimp Terminal

PLEASE CHECK WWW.MOLEX.COM FOR LATEST PART INFORMATION