THIS DRAWING IS UNPUBLISHED. RELEASED FOR PUBLICATION NOV ,2003.
© COPYRIGHT 2003 BY TYCO ELECTRONICS CORPORATION. ALL RIGHTS RESERVED.

LOC	DIST
E	B

REVISIONS

P	LTR	DESCRIPTION	DATE	DWN	APVD
	B	EBD0-0248-03	12NOV03	JMS	FWK

1. SINGLE PACK IN ACCORDANCE WITH SPEC 107-3275
2. 100 TRAY PACK IN ACCORDANCE WITH SPEC 107-3275
3. 0.76µm Au PLATING OVER 1.27µm Ni PLATING OVER 0.76µm Cu PLATING
4. 0.08µm Au PLATING OVER 1.27µm Ni PLATING OVER 0.76µm Cu PLATING

5 HANDTOOL 9-1478240-0

6 DIE SET 9-1478248-0

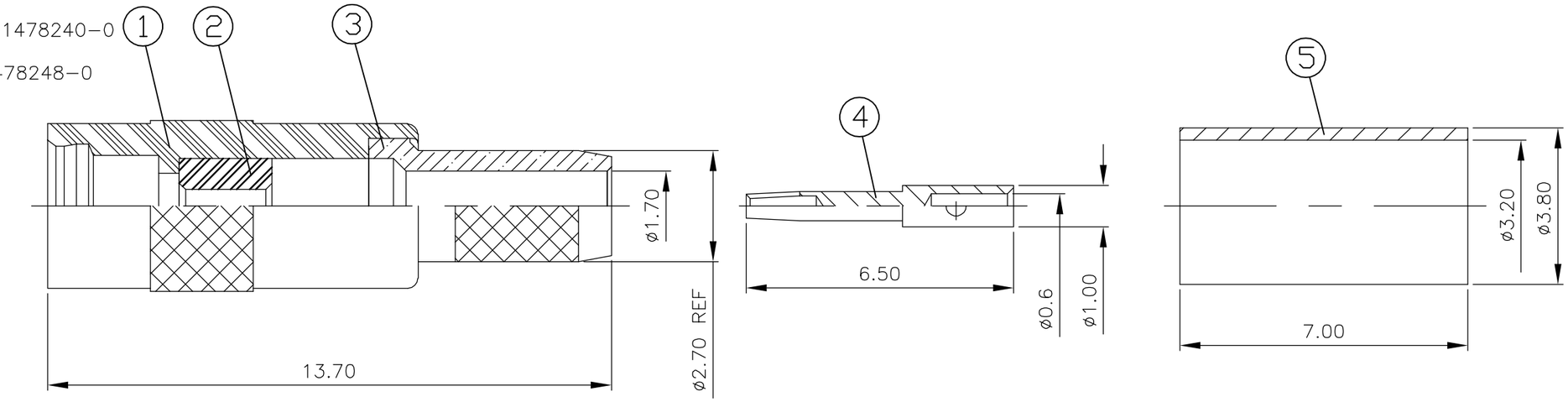

RECOMMENDED CENTRE CONTACT A/F SQR

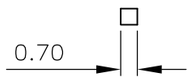

RECOMMENDED CRIMP SLEEVE A/F HEX

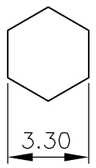

RECOMMENDED CABLE STRIPPING DIM'S

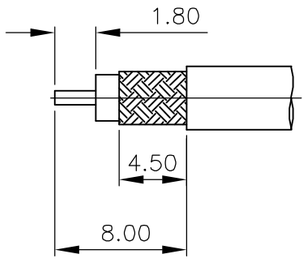

QUANTITY PER ASSY				PARTS LIST		
		1	1	BRASS (4)	CRIMP SLEEVE	5
		1	1	BERYLLIUM COPPER (3)	SOCKET	4
		1	1	BRASS (4)	BODY	3
		1	1	PTFE	INSULATOR	2
		1	1	BRASS (4)	BODY	1
		6--0	1--0	MATERIAL	DESCRIPTION	ITEM
		(2)	(1)			

THIS DRAWING IS A CONTROLLED DOCUMENT.

DIMENSIONS: MM

TOLERANCES UNLESS OTHERWISE SPECIFIED:
0 PLC ± –
1 PLC ± –
2 PLC ± –
3 PLC ± –
4 PLC ± –
ANGLES ± –

MATERIAL: SEE TABLE

FINISH: SEE TABLE

DWN J.SANDWELL 12NOV03
CHK S.PARLOW 12NOV03
APVD F.WHEELER-KING 12NOV03
PRODUCT SPEC 108-3462
APPLICATION SPEC 411-3278
WEIGHT –

tyco Electronics
Tyco Electronics Corporation
Stanmore, Middlesex, HA7 4RS

NAME: MMCX STRAIGHT JACK CRIMP RG174 50 OHMS –

SIZE	CAGE CODE	DRAWING NO	RESTRICTED TO
A3	00779	C-1634004	–

CUSTOMER DRAWING

SCALE NTS | SHEET 1 OF 1 | REV B