molex
one company › a world of innovation

This document was generated on 06/30/2011

PLEASE CHECK WWW.MOLEX.COM FOR LATEST PART INFORMATION

Part Number: 0521030419

Status: Active

Description: 1.00mm (.039") Pitch FFC/FPC Connector, SMT, Right Angle, ZIF, Top Contact Style Receptacle, Tray Packaging, 4 Circuits, Lead-Free

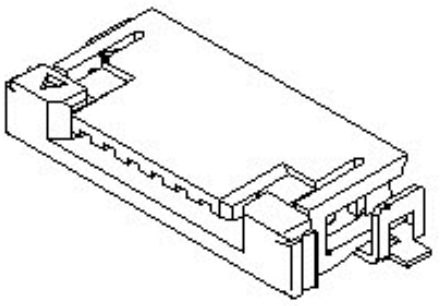

Series

image - Reference only

Documents:

3D Model
Drawing (PDF)
Product Specification PS-52103-004 (PDF)
RoHS Certificate of Compliance (PDF)

Agency Certification

CSA	LR19980
UL	E29179

General

Product Family	FFC/FPC Connectors
Series	52103
Product Name	N/A

Physical

Circuits (Loaded)	4
Color - Resin	Natural
Contact Position	Top
Durability (mating cycles max)	30
Entry Angle	90° Angle
Flammability	94V-0
Mated Height	2.70mm (.106")
Material - Metal	Phosphor Bronze
Material - Plating Mating	Tin-Bismuth
Material - Plating Termination	Tin-Bismuth
Material - Resin	High Temperature Thermoplastic
Number of Rows	1
Orientation	Right Angle
PC Tail Length	2.00mm (.079")
PCB Locator	Yes
PCB Retention	Yes
Packaging Type	Tray
Pitch - Mating Interface	1.00mm (.039")
Plating min - Mating	1.016µm (40µ")
Plating min - Termination	1.016µm (40µ")
Polarized to PCB	No
Stackable	No
Surface Mount Compatible (SMC)	N/A
Temperature Range - Operating	-20°C to +85°C
Termination Interface: Style	Surface Mount
Wire/Cable Type	FFC/FPC

Electrical

Current - Maximum per Contact	1A
Voltage - Maximum	125V

Material Info

Reference - Drawing Numbers

Product Specification	PS-52103-004
Sales Drawing	SD-52103-002

EU RoHS
ELV and RoHS Compliant
REACH SVHC
Not Reviewed
Low-Halogen Status
Not Low-Halogen

China RoHS

Need more information on product environmental compliance?

Email productcompliance@molex.com
For a multiple part number RoHS Certificate of Compliance, click here

Please visit the Contact Us section for any non-product compliance questions.

Search Parts in this Series
52103Series

This document was generated on 06/30/2011
PLEASE CHECK WWW.MOLEX.COM FOR LATEST PART INFORMATION