THIS DRAWING IS UNPUBLISHED. RELEASED FOR PUBLICATION -,- .
© COPYRIGHT - BY TYCO ELECTRONICS CORPORATION. ALL RIGHTS RESERVED.

LOC	DIST
AA	00

REVISIONS

P	LTR	DESCRIPTION	DATE	DWN	APVD
	D	ECO-07-026535	01APR2008	LAM	AWF

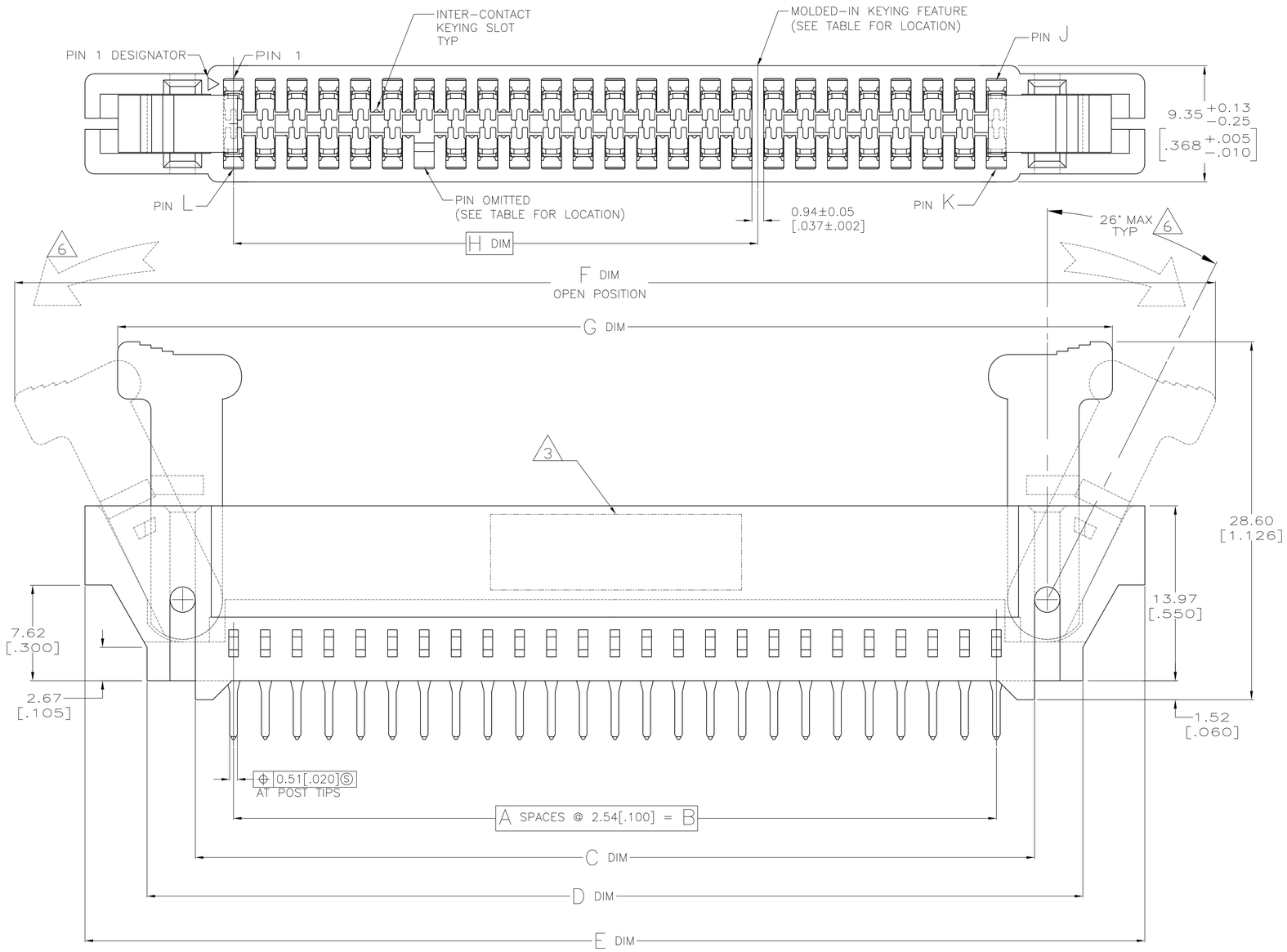

1. MATERIAL:
   HOUSING: GLASS FILLED POLYESTER; COLOR: BLACK
   CONTACT: PHOSPHOR BRONZE
   LATCH: GLASS FILLED POLYESTER, COLOR: BLACK

2. FINISH:
   0.00076[.000030] GOLD PLATE IN CONTACT AREA,
   0.00254[.000100] MIN MATTE TIN ON SOLDER POSTS, ALL
   OVER 0.00127[.000050] MIN NICKEL

3. AMP LOGO, TE PART NUMBER, DATE CODE AND CSA LOGO INK STAMPED WHITE (HOT STAMPED OR LAZER PRINTED) IN THE APPROXIMATE AREA SHOWN, EITHER SIDE PERMISSABLE, WHEN HOUSING SIZE PERMITS

4. DATUMS AND BASIC DIMENSIONS ESTABLISHED BY CUSTOMER

5. CONNECTORS SHOWN ARE USED IN APPLICATIONS WITH VRM MODULES WEIGHING 3 OUNCES OR LESS. ALTERNATE CONNECTOR AND LATCH METHOD IS AVAILABLE FOR VRM MODULES WEIGHING UP TO 6 OUNCES.

6. CAUTION: LATCHES ARE INTENDED FOR RETENTION OF PC BOARD TO CONNECTOR, DO NOT ATTEMPT TO FULLY EJECT PC BOARD FROM CONNECTOR WHILE DISENGAGING LATCHES. DAMAGE TO LATCHES AND OR CONNECTOR MAY OCCUR

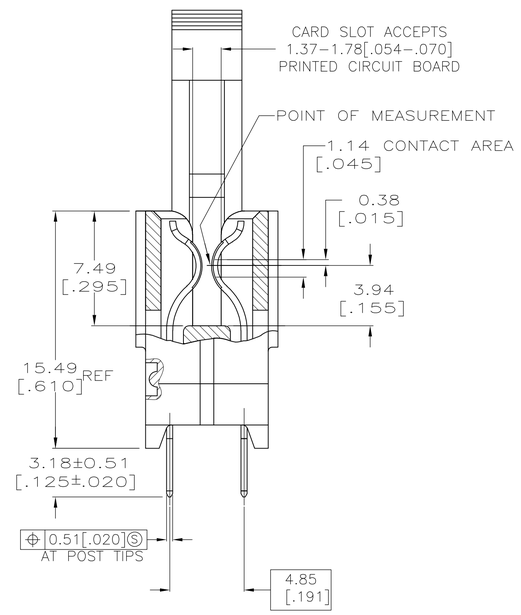

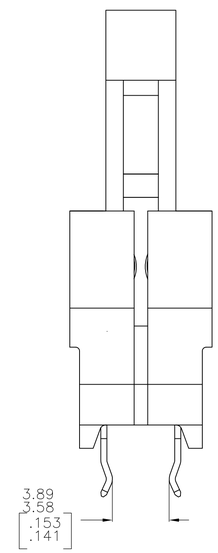

BOARD RETENTION FEATURE (SEE TABLE FOR LOCATION)

OBSOLETE	6364666-4
	PART NUMBER

VRM DESIGNATION	BOARD RETENTION FEATURE LOCATION	MOLDED-IN KEYING FEATURE LOCATED BETWEEN PINS	OMITTED PIN & HOLE	R	P	L	K	J	H	G	F	E	D	C	B	A	NO OF DUAL POSITIONS	PART NUMBER
–	2,3,29,30, 33,34,60,61	12 & 13	6	49.35 [1.943]	31.50 [1.240]	62	32	31	29.21 [1.150]	97.10 [3.823]	113.00 [4.449]	99.92 [3.934]	90.02 [3.544]	82.52 [3.249]	76.20 [3.000]	30	31	6364666-5
8.5, +12V	2,3,23,24, 27,28,48,49	17 & 18	44	21.41 [.843]	44.27 [1.743]	50	26	25	41.91 [1.650]	81.86 [3.223]	97.76 [3.849]	84.68 [3.334]	74.78 [2.944]	67.28 [2.649]	60.96 [2.400]	24	25	6364666-2
9.0, +12V	2,3,29,30, 33,34,60,61	11 & 12	6	51.89 [2.043]	28.96 [1.140]	62	32	31	26.67 [1.050]	97.10 [3.823]	113.00 [4.449]	99.92 [3.934]	90.02 [3.544]	82.52 [3.249]	76.20 [3.000]	30	31	6364666-1

THIS DRAWING IS A CONTROLLED DOCUMENT.

DIMENSIONS: mm [INCHES]

TOLERANCES UNLESS OTHERWISE SPECIFIED:
0 PLC ± –
1 PLC ± –
2 PLC ± 0.13[.005]
3 PLC ± –
4 PLC ± –
ANGLES ± 2°

MATERIAL: SEE NOTE 1
FINISH: SEE NOTE 2

DWN 01APR2008 AWF/L.A.MAYER
CHK 01APR2008 A.W.FRANTUM
APVD 01APR2008 S.FLICKINGER
PRODUCT SPEC 108-9039-1
APPLICATION SPEC 114-13018
WEIGHT –

Tyco Electronics
Tyco Electronics Corporation
Harrisburg, PA 17105-3608

NAME: CONNECTOR ASSEMBLY, STANDARD EDGE II, DUAL POSITION, 2.54[.100] CENTERLINE

SIZE	CAGE CODE	DRAWING NO	RESTRICTED TO
A1	00779	C-6364666	–

CUSTOMER DRAWING | SCALE 5:1 | SHEET 1 OF 2 | REV D

THIS DRAWING IS UNPUBLISHED. RELEASED FOR PUBLICATION -,- .
© COPYRIGHT - BY TYCO ELECTRONICS CORPORATION. ALL RIGHTS RESERVED.

LOC	DIST
AA	00

REVISIONS

P	LTR	DESCRIPTION	DATE	DWN	APVD
	—	SEE SHEET 1	—	—	—

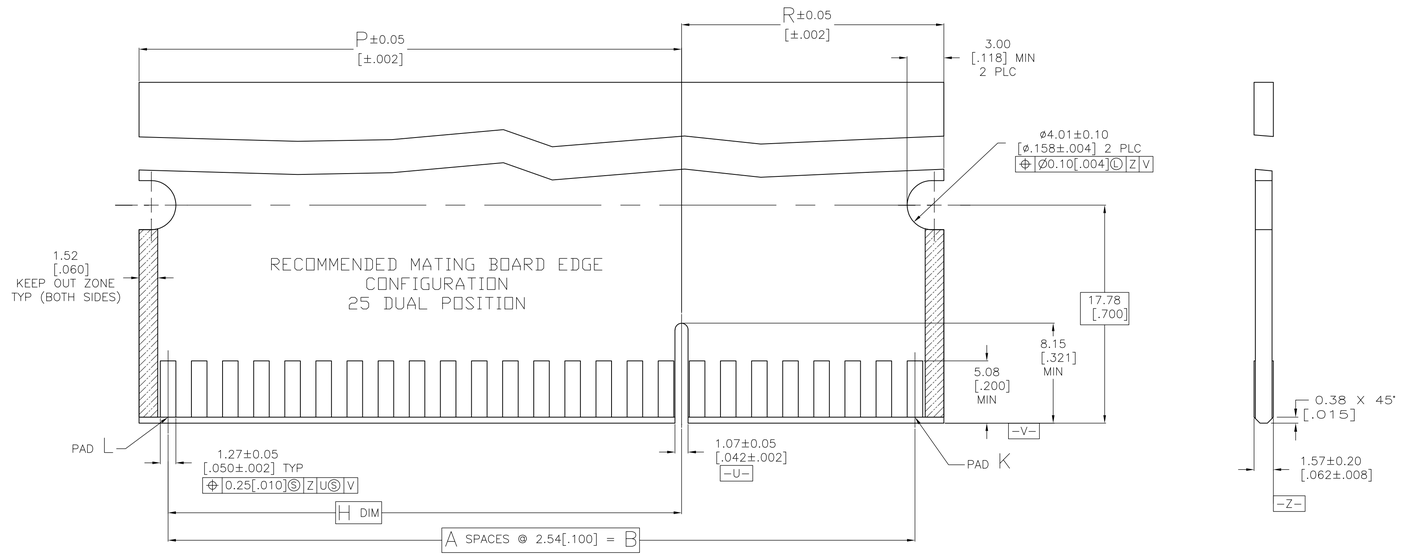

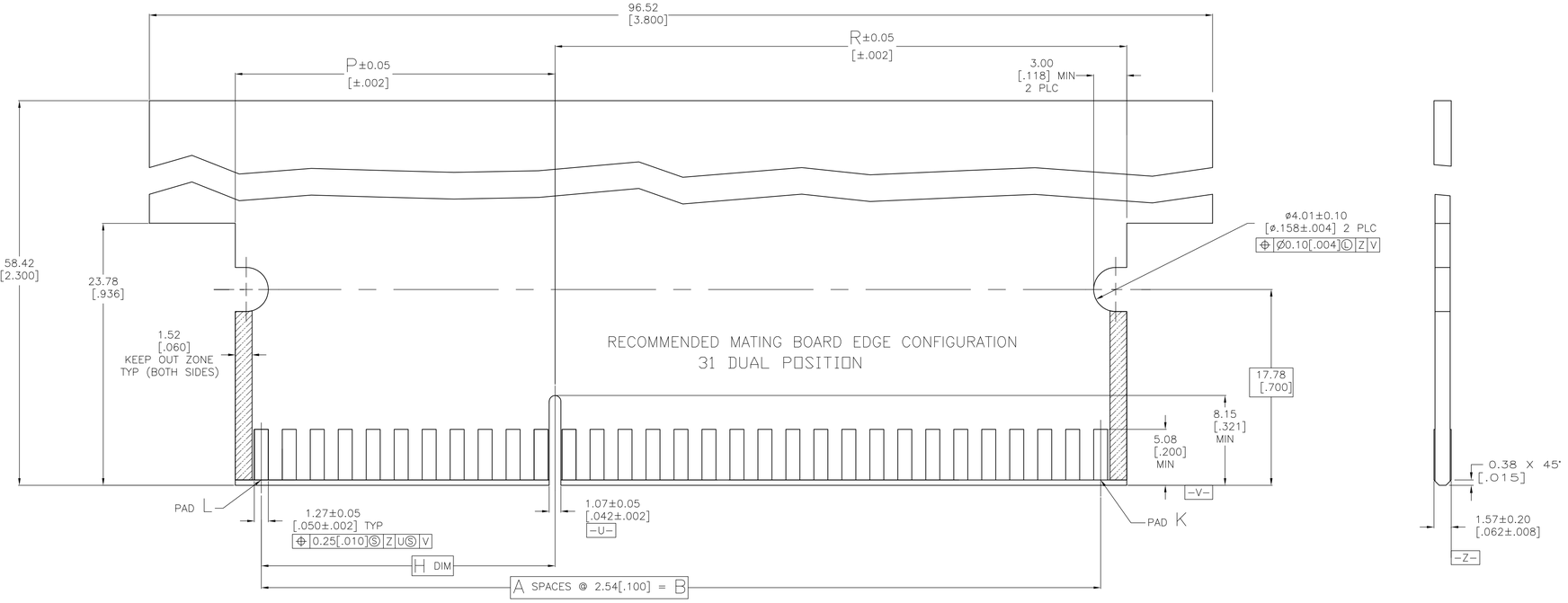

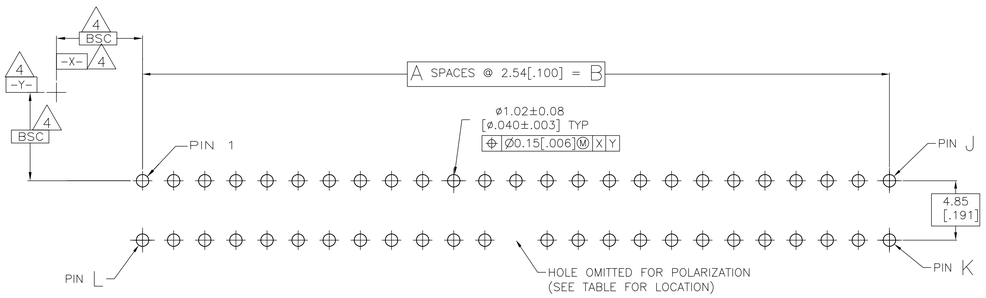

RECOMMENDED PC BOARD HOLE LAYOUT

THIS DRAWING IS A CONTROLLED DOCUMENT.	DWN AWF/L.A.MAYER 01APR2008	Tyco Electronics	Tyco Electronics Corporation Harrisburg, PA 17105-3608
DIMENSIONS: mm [INCHES]	CHK A.W.FRANTUM 01APR2008	NAME	CONNECTOR ASSEMBLY, STANDARD EDGE II, DUAL POSITION, 2.54[.100] CENTERLINE
TOLERANCES UNLESS OTHERWISE SPECIFIED: 0 PLC ± – ; 1 PLC ± – ; 2 PLC ± 0.13[.005] ; 3 PLC ± – ; 4 PLC ± – ; ANGLES ± 2°	APVD S.FLICKINGER 01APR2008	PRODUCT SPEC 108-9039-1	
		APPLICATION SPEC 114-13018	SIZE A1 · CAGE CODE 00779 · DRAWING NO C-6364666 · RESTRICTED TO —
MATERIAL SEE NOTE 1	FINISH SEE NOTE 2	WEIGHT —	
		CUSTOMER DRAWING	SCALE 5:1 · SHEET 2 OF 2 · REV D