THIS DRAWING IS UNPUBLISHED. RELEASED FOR PUBLICATION 1997
© COPYRIGHT 1997 BY TYCO ELECTRONICS CORPORATION. ALL RIGHTS RESERVED.

LOC	DIST
A1	–

REVISIONS

P	LTR	DESCRIPTION	DATE	DWN	APVD
	A8	Released as per ECR-07-012890	16-07-07	SK	TS
	A9	REVISED PER ECO-09-027197	01FEB10	KK	HMR

PN 1-3 & 2-3

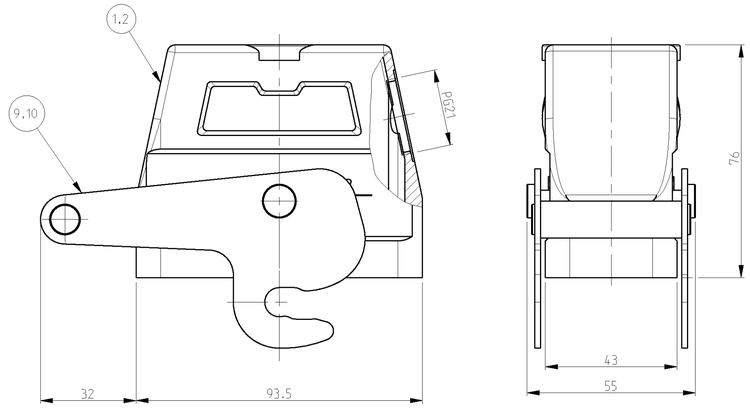

PN 0-4, 0-1, 2-6 & 1-6

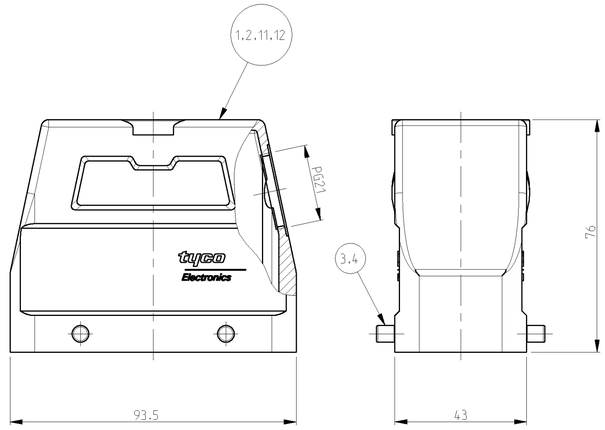

PN 1-7 & 0-5

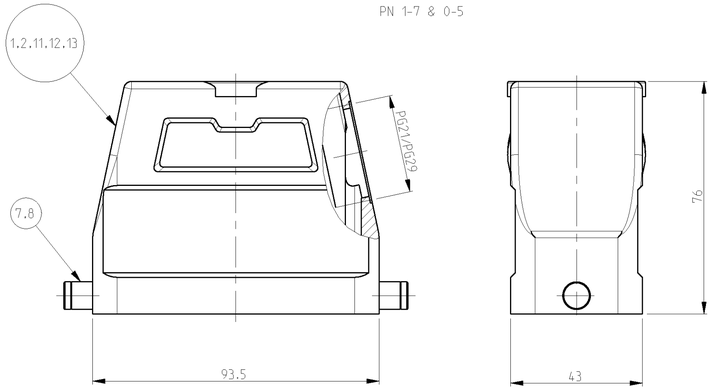

PN 0-3 & 0-6

5 Valid only for PN 0-3 & 0-6

Landing at measure 72.5 (20mm Deep) milled off : bothsides

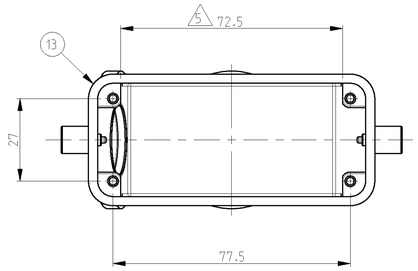

PN 1-1 & 2-1

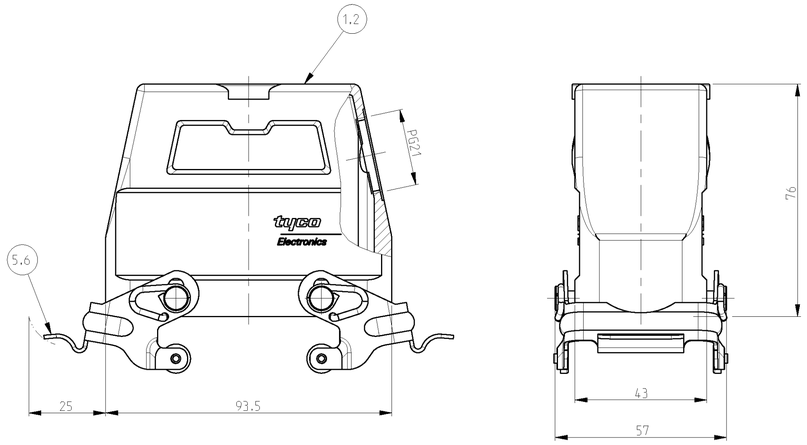

NOTES

1 Material: Housing: aluminium diecasting alloy

2 Surface:- powder varnish-grey
Varnish black

3 Varnish on the inside not necessarily

4 Packaging
quantity 5 piece

PN 1-1 & 2-1

SCALE 1:2

PN 1-3 & 2-3

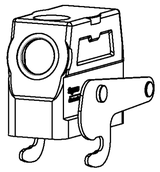

SCALE 1:2

PN 0-4.0-1.2-6 & 1-6

SCALE 1:2

0-6	0-5	0-4	0-3	0-2	0-1	2-3	1-3	2-7	1-7	2-1	1-1	2-6	1-6	DESCRIPTION	MATERIAL	SURFACE	COLOR	ITEM NO	NOTES
														HD-K Hood	Aluminium	Aluminium oxide	Black	13	Landing machined 5
	1	1												HD Hood	Aluminium	–	Grey	12	With out PG/with out TE-logo
				1	1									HD Hood	Aluminium	–	Grey	11	With out PG
						1								ZB-Central clip	Stainless Steel	–	–	10	–
							1							ZB-Central clip	Steel	Zinc plated	Blue	9	–
2			2					2						LB-Clip bolt	Stainless Steel	–	–	8	–
	2			2					2					LB-Clip bolt	Steel	Zinc plated	Blue	7	–
										2				VS-Locking clip	Stainless Steel	–		6	–
											2			VS-Locking clip	Steel	Zinc plated	Blue	5	–
												4		VS-Clip bolt	Stainless Steel	–		4	–
		4			4								4	VS-Clip bolt	Steel	Zinc plated	Blue	3	–
						1		1		1		1		HD-K Hood	Aluminium	Aluminium oxide	Black	2	–
							1		1		1		1	HD Hood	Aluminium	–	Grey	1	–
5			5											ORDERING TEXT					
														HD.40.STS.1.21.G					
														HD-K.40.STS.1.21.G					
														HD.40.STS-VS.1.21.G					
														HD-K.40.STS-VS.1.21.G					
														HD.40.STS-GR.1.21.G					
														HD-K.40.STS-GR.1.21.G					
														HD-Z.40.STS-ZB.1.21.G					
														HD-K/Z.40.STS-ZB.1.21.G					
														~~HD.40.ST~~					
														~~HD.40.ST-GR~~					
														HD-K.40.STS-GR.1.21.G					
														HD.40.ST					
														HD.40.ST-GR					
														HD-K.40.STS-GR.1.21.G					

OBSOLETE

OBSOLETE

THIS DRAWING IS A CONTROLLED DOCUMENT FOR TYCO ELECTRONICS CORPORATION. IT IS SUBJECT TO CHANGE. ALL QUESTIONS TO THE ENGINEERING ORGANIZATION SHOULD BE CONTACTED FOR THE LATEST REVISION.

DIMENSIONS: mm

TOLERANCES UNLESS OTHERWISE SPECIFIED: ANGLES ±0.25DEG ALL DIMENSIONS AFTER PLATING
0 PLC ±
1 PLC ±
2 PLC ±
3 PLC ±
4 PLC ±
ANGLES ±

MATERIAL

FINISH

DWN Schneider 19.12.1997
CHK Kramer 26.06.1998
APVD –
PRODUCT SPEC –
APPLICATION SPEC –
WEIGHT

Tyco Electronics

Tyco Electronics, AMP GmbH
D-53819, Neunkirchen, Germany

NAME
HOOD
HD.40.STS.1.21.G/1.29.G

SIZE	CAGE CODE	DRAWING NO	RESTRICTED TO
A1	00779	G-1102564	–

CUSTOMER DRAWING

SCALE	SHEET	OF	REV
1:1	1	1	A9