used for: D-SUB FILTER

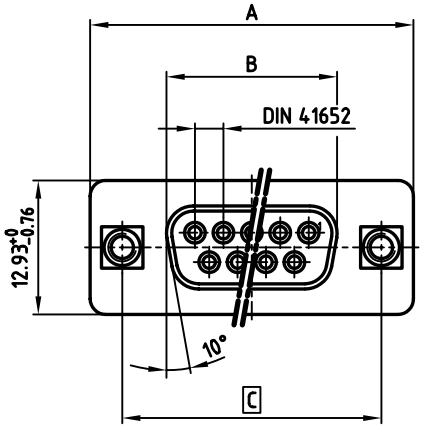

POS.	A -0.76	B -0.25	C	PART NO.
9	31.19	16.46	25.00 +0.12 -0.13	**242A15030X**
15	39.52	24.79	33.30 +0.15 -0.1	**242A15040X**
25	53.42	38.50	47.04 ±0.13	**242A15050X**
37	69.70	54.96	63.50 ±0.13	**242A15060X**

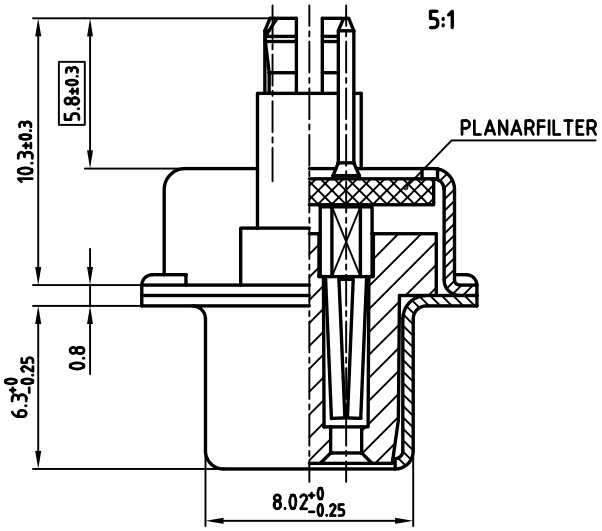

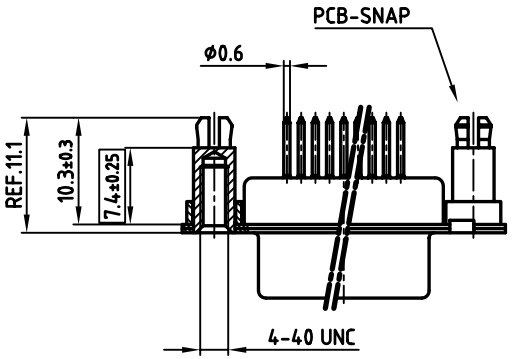

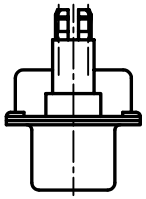

NOTES:

1. METALSHELLS: STEEL; TIN PLATED
2. INSULATOR: PBTP GF UL 94 V-0
3. CONTACTS: COPPER ALLOY
4. PLATING: HARD GOLD OVER NICKEL
5. PCB-SNAP: COPPER ALLOY; TIN PLATED
   PCB HOLE Φ3.1±0.1; PCB THICKNESS t=1.6mm
6. CAPACITANCE: 1300pF±20%
7. DIELECTRIC WITHSTANDING VOLTAGE: 424VDC
8. MAXIMUM TORQUE VALUE FOR THREAD: 6" LBS
9. [ ] = CRITICAL DIMENSION: SPC

THIS DRAWING MAY NOT BE COPIED OR REPRODUCED IN ANY WAY, AND MAY NOT BE PASSED ON TO A THIRD PARTY WITHOUT WRITTEN PERMISSION. OWNERSHIP AND COPYRIGHT OF CONEC GmbH

DO NOT ALTER CAD DRAWING BY HAND

CONEC CORPORATION
BRAMPTON, ONTARIO

tolerance

rev.	description	date	name

1998	date	name
drawn	08.05.	Barcinski
appd.	08.05.	Mickenbecker
norm	DIN 41652	
d-old		

scale: 2:1 (5:1)
material: SEE NOTES

title:
D-FILTER FEMALE P-TYP
9-37pos. PIN 5.8mm
WITH THREADED SPACER CLIP

dwg no: **24K1IY8A**
CAD/ REL.13
DIN-A 3
sh: 1/1

product no: **SEE TABLE**