THIS DRAWING IS UNPUBLISHED. RELEASED FOR PUBLICATION - , - .
© COPYRIGHT - By - ALL RIGHTS RESERVED.

LOC	DIST
—	—

REVISIONS

P	LTR	DESCRIPTION	DATE	DWN	APVD
	E	REV PER ECO 15-004862	4-8-15	CT	WB

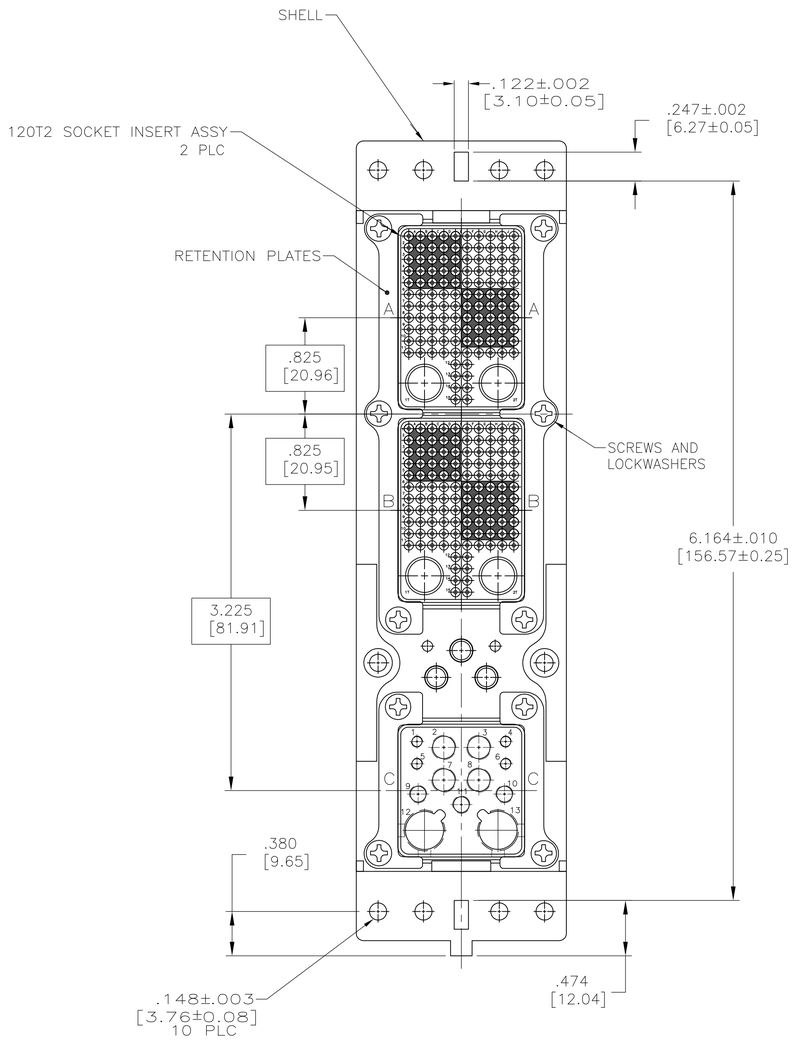

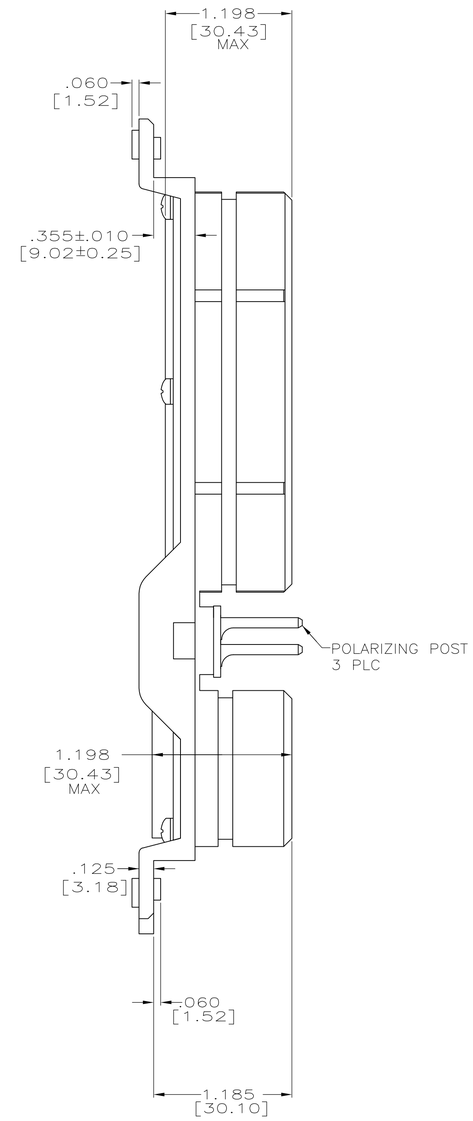

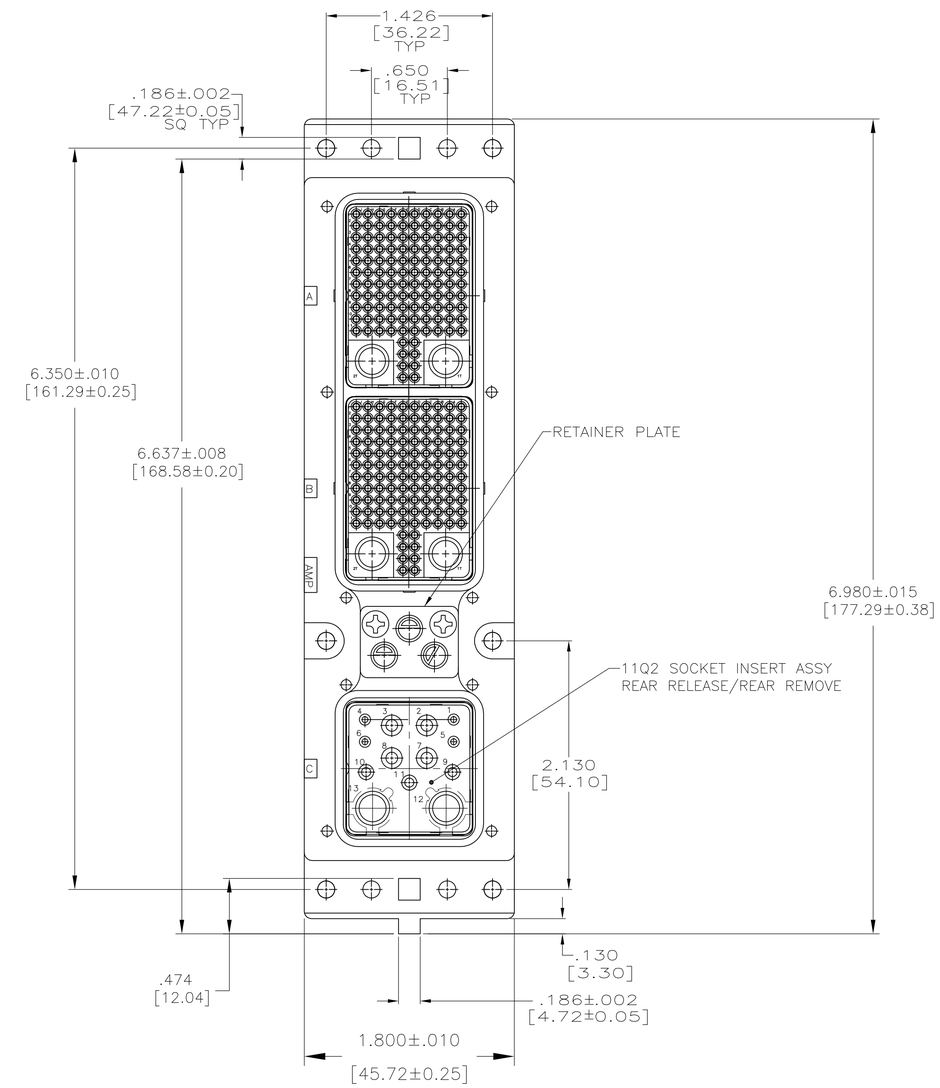

1. CONNECTOR DIMENSIONS ARE PER ARINC 600 SPECIFICATION.
2. CONNECTOR IS SUPPLIED WITH CONTACTS (PER TABLE), NOT INSTALLED.
3. CONNECTOR IS SUPPLIED WITH A DUST COVER INSTALLED (NOT SHOWN).
4. CONTACTS NOT SHOWN IN FRONT & REAR VIEWS FOR CLARITY.

COMPONENT	MATERIAL	FINISH
SHELL	DIE CAST ALUMINUM PER ASTM-B-85	CHEMICAL CONVERSION COATING PER MIL-C-5541, CLASS 1A
INSERT RETENTION PLATES	ALUMINUM ALLOY PER ASTM-B-209	CHEMICAL CONVERSION COATING PER MIL-C-5541, CLASS 1A
SCREWS AND LOCKWASHERS	STEEL OR STAINLESS STEEL	CHROMATE OVER ZINC OR PASSIVATED
POLARIZING POST	ZINC ALLOY PER ASTM-B-86	ELECTROLESS NICKEL
POLARIZING POST RETAINING PLATE	ALUMINUM ALLOY PER ASTM-B-209	BLUE ANODIZED PER MIL-A-8625
INSERTS	THERMOSET OR THERMOPLASTIC PPS PER MIL-M-24519	–
–	–	–
–	–	–

'07'	MODULE A & B 208262-3 (SIZE 22 SOCKET; QTY=2) MODULE C 208270-2 (SIZE 16 SOCKET; QTY=1) 208273-2 (SIZE 12 SOCKET; QTY=2)	1663557-2
'07'	MODULE A & B 208262-3 (SIZE 22 SOCKET; QTY=218) #448543-2 (SIZE 8 COAX SOCKET FOR AA8909 CABLE; QTY = 4) MODULE C 208267-2 (SIZE 20 SOCKET; QTY=4) 208270-2 (SIZE 16 SOCKET; QTY=3) 208273-2 (SIZE 12 SOCKET; QTY=4) 1445693-1 (SIZE 8 QUADRAX SOCKET; QTY=2)	1663557-1
KEYING POSITION	CONTACTS INCLUDED NOT INSTALLED	PART NUMBER

THIS DRAWING IS A CONTROLLED DOCUMENT.

DIMENSIONS: INCHES [mm]

TOLERANCES UNLESS OTHERWISE SPECIFIED:
0 PLC ± –
1 PLC ± –
2 PLC ± –
3 PLC ± .005 [0.13]
4 PLC ± –
ANGLES ±0°30'

MATERIAL: SEE CALLOUTS
FINISH: SEE CALLOUTS

DWN C.C.THOMAS 6-6-03
CHK S.GLATFELTER 6-6-03
APVD S.GLATFELTER 6-6-03
PRODUCT SPEC —
APPLICATION SPEC —
WEIGHT —

TE Connectivity

NAME: CONNECTOR ASSY,SIZE 2 PLUG,ARINC 600 –

SIZE	CAGE CODE	DRAWING NO	RESTRICTED TO
A1	00779	C-1663557	—

CUSTOMER DRAWING | SCALE 3:2 | SHEET 1 OF 1 | REV E

4805 (3/11)