CONFIDENTIAL

ELV AND RoHS COMPLIANT

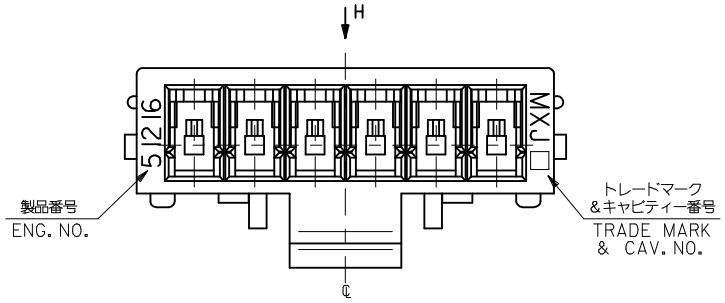

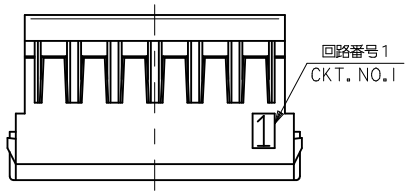

VIEW "H"

注記
NOTES

1. 適合ターミナル ： 59370シリーズ
   APPLICABLE TERMINAL : 59370 SERIES
2. 適合リテーナー ： 51217シリーズ
   APPLICABLE RETAINER : 51217 SERIES
3. 嵌合相手：55487、55755シリーズ
   MATE WITH : 55487、55755
4. 偶数極に適用。
   APPLY EVEN CIRCUIT PRODUCTS.
5. 4～15極に適用。
   APPLY 4-15 CIRCUITS.
6. 5～15極に適用。
   APPLY 5-15 CIRCUITS.
7. ELVおよびRoHS適合品
   ELV AND RoHS COMPLIANT
8. ハウジングの色（MATERIAL NO. の下1桁に対応）：
   HSG COLOR:

WHITE：	51216-***0
BLACK：	51216-***1
RED：	51216-***2
YELLOW：	51216-***3
BLUE：	51216-***4
GREEN：	51216-***6

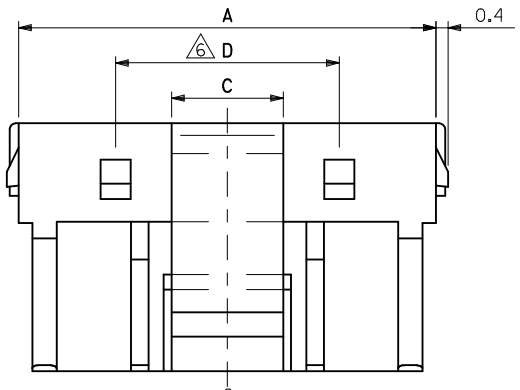

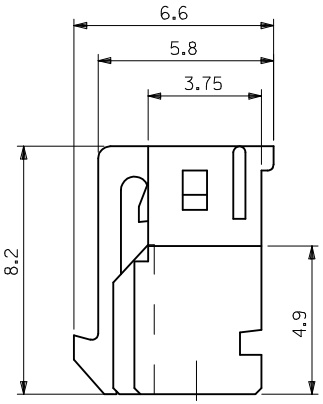

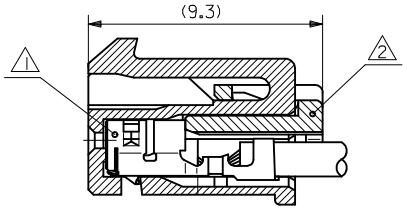

ターミナル及びリテーナー装着状態図

TERMINAL & RETAINER ASSEMBLY DRAWING

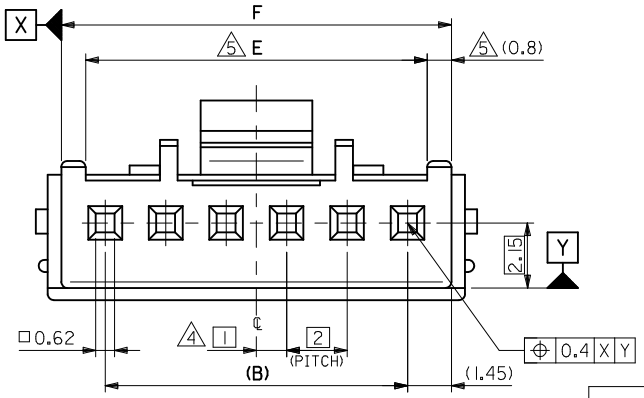

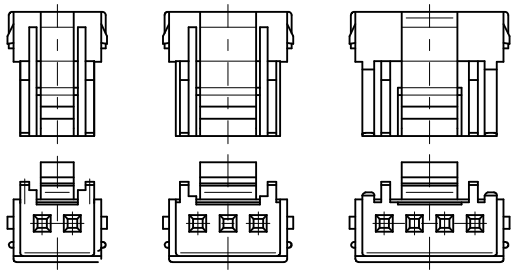

極数レイアウト図

LAYOUT OF EACH CKTS.

F	E	D	C	B	A	MATERIAL NO.	CKT.
30.9	29.3	7.4	3.7	28	31.8	51216-150*	15
28.9	27.3			26	29.8	-140*	14
26.9	25.3			24	27.8	-130*	13
24.9	23.3			22	25.8	-120*	12
22.9	21.3			20	23.8	-110*	11
20.9	19.3			18	21.8	-100*	10
18.9	17.3			16	19.8	-090*	9
16.9	15.3			14	17.8	-080*	8
14.9	13.3			12	15.8	-070*	7
12.9	11.3			10	13.8	-060*	6
10.9	9.3	7.4		8	11.8	-050*	5
8.9	7.3			6	9.8	-040*	4
6.9			3.7	4	7.8	-030*	3
4.9			2.2	2	5.8	51216-020*	2

材料 MATERIAL	PBTP, UL94V-0
仕上げ FINISH	—
適用電線範囲 WIRE RANGE	—
被覆外径 INS. RANGE	—

REV	DESCRIPTION	
D	REVISED	
	EC NO: J2014-1352	
	DRWN:TYAJIMA01	2014/03/03
	CH'KD:KASAKAWA	2014/03/04
	APPR:NUKITA	2014/03/03

GENERAL TOLERANCES (UNLESS SPECIFIED)

10 UNDER	±0.2
10 OVER 30 UNDER	±0.25
30 OVER	±0.3
ANGULAR ±3 °	

DRAFT WHERE APPLICABLE MUST REMAIN WITHIN DIMENSIONS

DIMENSION STYLE: MM ONLY	SCALE: ---	DESIGN UNITS: METRIC	THIRD ANGLE PROJECTION
DRAWN BY: T.YASUI	DATE: '00/2/22	TITLE: 2.0MM WIRE TO BOARD RECEPTACLE HOUSING	
CHECKED BY: T.YAMAGUCHI	DATE: '00/2/22		
APPROVED BY: M.FUKUSHIMA	DATE: '00/2/22	molex	
MATERIAL NO.: SEE TABLE	DOCUMENT NO.: SD-51216-004	SHEET NO.: 1 OF 1	
SIZE: A3	THIS DRAWING CONTAINS INFORMATION THAT IS PROPRIETARY TO MOLEX INCORPORATED AND SHOULD NOT BE USED WITHOUT WRITTEN PERMISSION		

tb_frame_A3_J_ME_S
Rev G 2012/01/25