THIS DRAWING IS UNPUBLISHED. RELEASED FOR PUBLICATION -,- .
© COPYRIGHT - By - ALL RIGHTS RESERVED.

REVISIONS

P	LTR	DESCRIPTION	DATE	DWN	APVD
	H7	REVISED PER ECR-17-014951	16OCT2017	BDA	KR

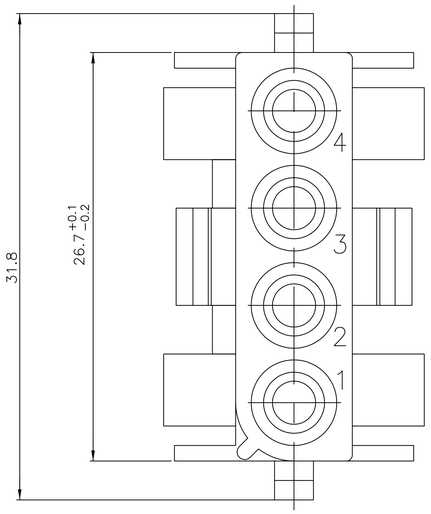

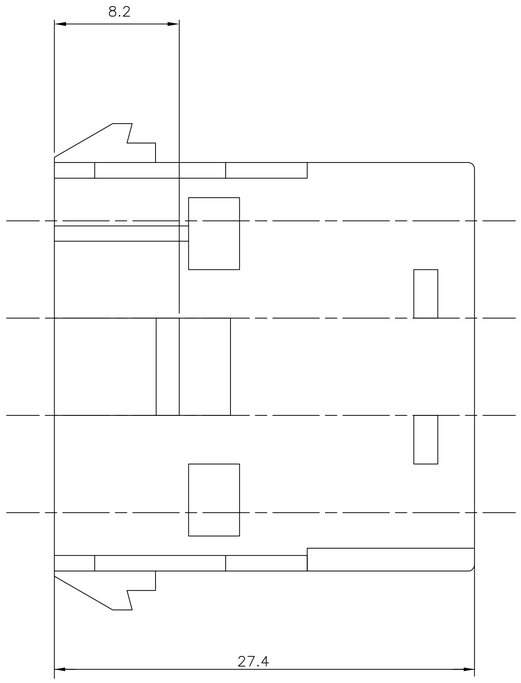

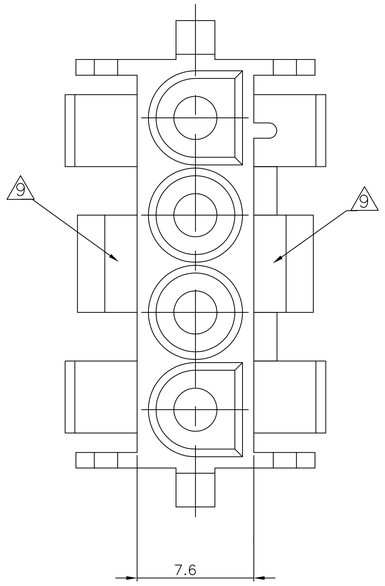

1 Geeignet für UMNL stift-uns Buchsenkontakte

2 Passend zu UMNL-steckergehäuse 926298, 350779, 480702

3 Empfohlene Blechstärke 0.75-2.3mm

4 Gehäuse muß in stanzrichtung eingeführt werden

5 Für verschlüsseltes Einsetzen der Gehäuse

6 Position von kammer 1 bei verschlüsseltem Einsetzen der gehäuse

7 NEUES MATERIAL (PHOSPHOR UND HALOGEN FREI)

8 GWT 750°C (WITHOUT FLAME)

9 CSA CERTIFICATION LOGO LOCATED ONCE ON ANY INDICATED SURFACE APPROXIMATELY AS SHOWN

10 DIMENSIONS SHOWN REPRESENT PRODUCT IN DRY, AS MOLDED, CONDITION. ADDITIONAL 2% GROWTH DUE TO SUBSEQUENT MOISTURE ABSORPTION MAY OCCUR AND SHOULD BE ACCOUNTED FOR.

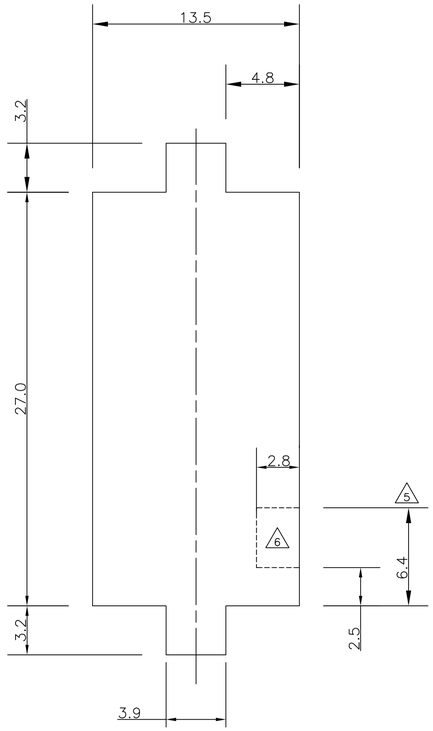

Montageausschnitt 3

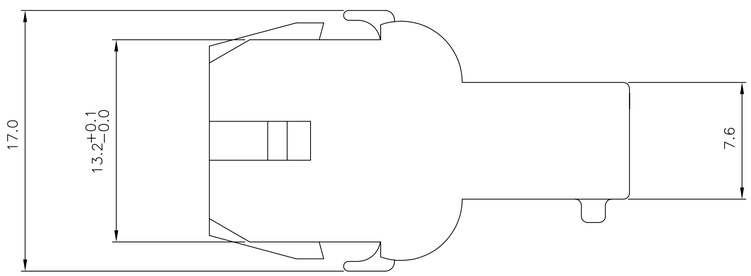

MATERIAL	PART NO
PA6.6 UL94 V-0 GWT750 NOFLAME 8	926305-7
PA6 UL94 V2 NATURAL 8	926305-6
PA6.6 UL94 V2 NATURAL	926305-5
PA6.6 UL94 V-0 Weiß	926305-4
PA6.6 UL94 V-0 NATURAL 7	926305-3
PA6.6 UL94 V-0 Schwarz	926305-2
Zytel EFE 1030 natural UL 94 V-2	926305-1

THIS DRAWING IS A CONTROLLED DOCUMENT.

DIMENSIONS: mm

TOLERANCES UNLESS OTHERWISE SPECIFIED:
0 PLC ± -
1 PLC ± 0.25
2 PLC ± 0.13
3 PLC ± -
4 PLC ± -
ANGLES ± -

MATERIAL: SEE TABLE

FINISH: -

DWN KARTHICK 06FEB2014
CHK ASHWINI 06FEB2014
APVD RAJENDRA PAI 06FEB2014

PRODUCT SPEC: -

APPLICATION SPEC: -

WEIGHT: -

TE Connectivity

NAME: UNIVERSAL MATE-N-LOK
4 WAY CAP HOUSING

SIZE	CAGE CODE	DRAWING NO	RESTRICTED TO
A1	00779	C-926305	-

CUSTOMER DRAWING | SCALE 2:1 | SHEET 1 OF 1 | REV H7

4805 (1/15)