PART NO.	"A" O.D.	"B" O.D.	"C" THICK.	MATERIAL	FINISH	
~~901-001~~	~~5/16~~	~~.147~~	~~.027~~	~~BRASS~~	~~NICKEL .00015 MIN.~~	OBS.
901-002	.640±.010	.495±.010	.022/.045	RUBBER	BLACK	

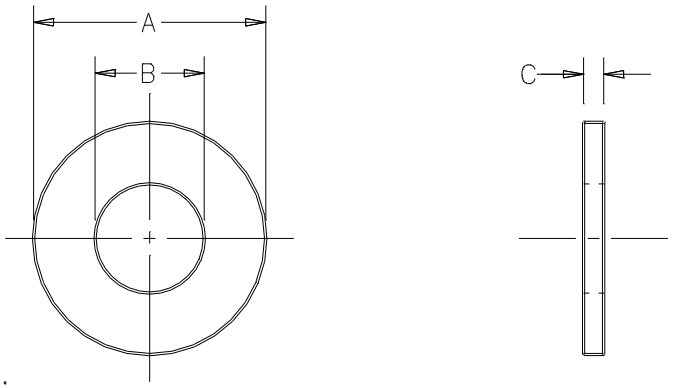

NOTES:

1. OIL RESISTANT SYNTHETIC RUBBER, 75-85 DUROMETER HARDNESS.
2. FLAT SURFACES TO BE SMOOTH & FREE OF DEPRESSIONS OR OTHER FLAWS.
3. ALL SHIPMENTS REQUIRE A CERTIFICATE OF COMPLIANCE.

NO	COMPONENT NO	DESCRIPTION	QTY/M	U/M

BILL OF MATERIAL

UNLESS OTHERWISE SPECIFIED, DIMENSIONS DO NOT INCLUDE PLATING.

O	DENOTES CRITICAL CHARACTERISTICS.
CPK	DENOTES CPK DIMENSIONS,-MINIMUM CPK VALUE
⟨ST⟩	DENOTES A CHARACTERISTIC THAT PROVIDES AN INDICATION OF PROCESS PERFORMANCE. PROCEDURE FOR MEASUREMENT AND TRACKING TO BE DEFINED IN LITTELFUSE INSPECTION INSTRUCTIONS.
CP	DENOTES CP DIMENSIONS,-MINIMUM CP VALUE MUST BE WITHIN THE DIMENSIONAL LIMITATIONS SHOWN ON DRAWING AND INITIALLY LOCATED TO ALLOW FOR MAXIMUM TOOL LIFE.

LTR	REVISION	CHK	APD
Z	38507C-REVISE & REDRAWN IN NEW FORMAT 7/11/97 KAM		
AA	81672C-OBS. 901-001 11/1/01 PJM		

COPIES TO

1	9	18
2	10	19
3	12	20
4	13	21
5	14	23
6	15	33
7	16	43
8	17	53

MATL SPEC		FINISH
DRW KAM	DATE 6/27/97	SCALE 4:1
CHK	DATE	SUPER DRW
APPD	DATE	RAW STK WT LBS/M

TOLERANCE UNLESS OTHERWISE SPECIFIED

TWO PLACE DEC ±.01 FRACTION ±
THREE PLACE DEC ±.005 ANGULAR ±°

TITLE WASHERS

Littelfuse®
DES PLAINES, ILLINOIS 60016

REVISION AA

DRWG. NO. 901-001 THRU 901-002

UNCONTROLLED DOCUMENT

CAD GENERATED DRAWING - NO PENCIL CHANGES ALLOWED