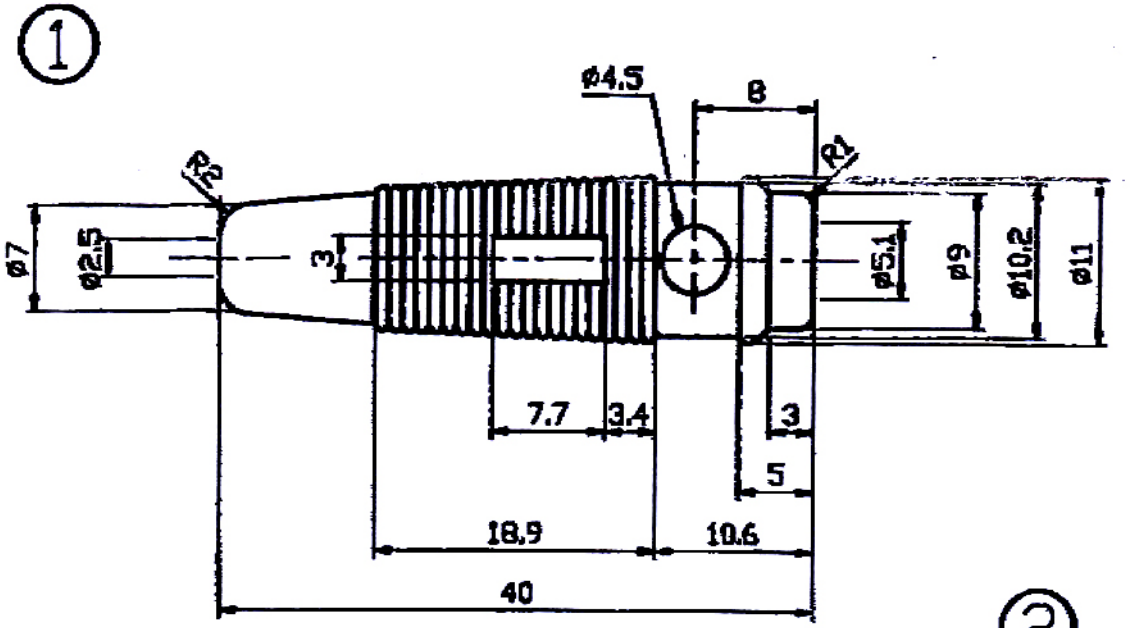

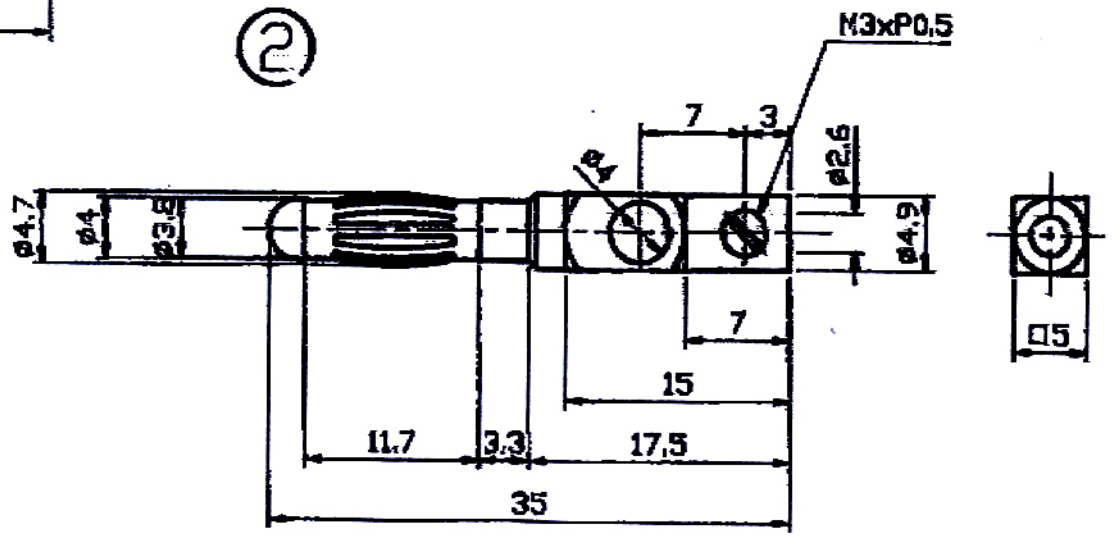

GOLDSUN ELECTRONICS CO., LTD.			
JAMECO NO. 137526	GOLDSUN NO. HP-2834-R(ROHS)		
Description BANANA PLUG. GOLD PLATED RED & BLACK PAIR			Rev. 1
UNIT: mm	SCALE:	SHEET 1 OF 1	CAS No: ERN No: